Apollo Color Television Subsystem

Operation and Training Manual

1 June 1971

Prepared for

NASA MANNED SPACE FLIGHT CENTER
Houston, Texas

By

WESTINGHOUSE DEFENSE AND SPACE CENTER
Aerospace and Electronic Systems Division
Baltimore, Maryland

APOLLO COLOR TELEVISION SUBSYSTEM

This equipment was made for NASA/MSC; Houston, Texas; under Contract Number 9-9945 by the Westinghouse Electric Corporation; Aerospace Division; Baltimore, Maryland.

TABLE OF CONTENTS

Heading Caution		Page
1.0	System Description	1-1
1.1	Command Module Camera Sub-System	1-1
1.1.1	Components	1-1
1.1.2	Command Module Camera Cables	1-1
1.1.3	Command Module Camera Power	1-3
1.1.3.1	Camera	1-3
1.1.3.2	Monitor	1-3
1.1.4	Physical Dimension (Size and Weight)	1-3
1.1.5	Command Module Camera Controls	1-4
1.1.5.1	Camera Operational Controls	1-4
1.1.5.2	Monitor Operational Control	1-4
1.2	Lunar Excursion Module (LEM) Camera Sub-System	1-11
1.2.1	Components	1-11
1.2.2	LEM Camera Cables	1-11
1.2.3	LEM Camera Electrical & Physical Summation	1-12
2.0	System Operation	2-1
2.1	Lens Control	2-1
2.1.1	General	2-1
2.1.2	Zoom Control	2-1
2.1.3	Focus	2-14
2.1.4	Aperture Control	2-15
2.2	Automatic Light Control (ALC)	2-15
2.3	Turn-On Procedure	2-16
2.3.1	Command Module Camera	2-16
2.3.1.1	Cable Connections	2-16
2.3.1.2	System Adjustments	2-18
2.3.2	LEM Camera	2-19

2.3.2.1	Cable Connections	2-19
2.3.2.2	System Adjustments	2-20
3.0	Theory of Operation	3-1
3.1	General Description	3-1
3.2	Circuit Theory	3-7
3.2.1	Imaging Section	3-7
3.2.2	Camera Circuit Description	3-10
3.2.2.1	Video Circuit	3-10
3.2.2.1.1	Preamplifier	3-10
3.2.2.1.3	Mixer	3-10
3.2.2.1.4	Aperture Correction	3-14
3.2.2.1.5	ALC/AGC	3-17
3.2.2.2	Sync Generator	3-17
3.2.2.3	Deflection System	3-17
3.2.2.3.1	Horizontal Sweep Circuit	3-17
3.2.2.3.2	Vertical Sweep Circuit	3-19
3.2.2.4	Sweep Fail Protect	3-20
3.2.2.5	Focus Regulation	3-22
3.2.2.6	Tube Bias Board Circuit	3-25
3.2.2.7	Transmit/Standby Switch	3-25
3.2.2.8	Motor Circuit Description	3-31
3.2.2.8.1	Wheel Pulse Amplifier	3-31
3.2.2.8.2	Motor Logic	3-31
3.2.2.8.3	Filter Circuit	3-37
3.2.2.8.4	Motor Drive Amplifier	3-42
3.2.2.8.5	Sync Generator Synchronizer	3-42
3.2.2.9	Power Supply	3-43
3.2.2.9.1	Low Voltage Supply	3-43
3.2.2.9.2	High Voltage	3-44
4.0	Monitor	4-1
4.1	General Description	4-1
4.2	Circuit Description	4-1
4.2.1	Video Preamplifier	4-1
4.2.2	Sync Separator	4-1

4.2.3	Sweep Circuits	4-2
4.2.3.1	Vertical Sweep	4-2
4.2.3.2	Horizontal Sweep	4-3
4.2.4	Video Post Amplifier	4-5
4.2.5	Power Supplies	4-5
4.2.5.1	High Voltage Supply	4-5
4.2.5.2	Low Voltage Supply	4-6
5.0	Ground Support Equipment	5-1
5.1	General	5-1
5.2	Doppler Shift Correction	5-1
5.3	Scan Conversion	5-3

CAUTION

This camera contains a light sensitive glass tube. Care must be exercised in shipping, handling, and when exposing it to light. The camera can be safely shipped in its shipping container and even then rough handling and bumping must be avoided. The camera must not be pointed at bright light sources, especially point sources. Never point the camera at the sun; either off or on.

1.0 SUBSYSTEM DESCRIPTION

The color camera subsystem is made in two (2) configurations. One is for use in the Command Module (CM), and the other is for use on the lunar surface attached to the Lunar Excursion Module (LEM).

The main differences between the two cameras lie in the finishings and the fittings. The outer finishings on the LEM Camera, chosen for low absorption and low emissivity, is for thermal control. It is a white semi-soft coating that is easily deteriorated by dust and finger prints. When outside the shipping container and its plastic bag, storage and operation of the camera should take place in a dust free area, and clean white gloves should be worn during handling.

The CM Camera has an anodized finish and the use of gloves during handling, while not required is preferred.

1.1 Command Module Camera Subsystem

1.1.1 Components (See Figure 1)

The Command Module Camera Subsystem consists of the following components:

(a) Camera - NASA No. SEB16101081-701

(b) Lens - NASA No. SEB16101081-703

(c) Cable - NASA No. SEB16101081-709
(Camera to Monitor)

(d) Cable - NASA No. SEB16101081-707
(Camera to Console)

(e) Monitor - NASA No. SEB16101081-705

1.1.2 Command Module Camera Cables

(a) Cable - Camera to Monitor - NASA No. SEB16101081-709

This cable carries power and video from the camera to the monitor. It is twelve (12) feet long and has a seven (7) pin male Deutsch connector at the camera

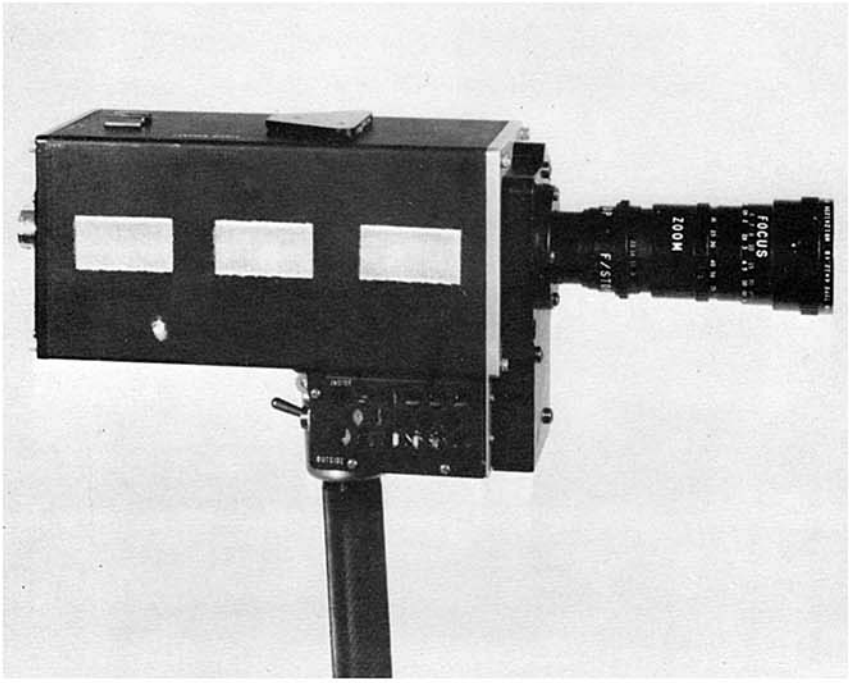

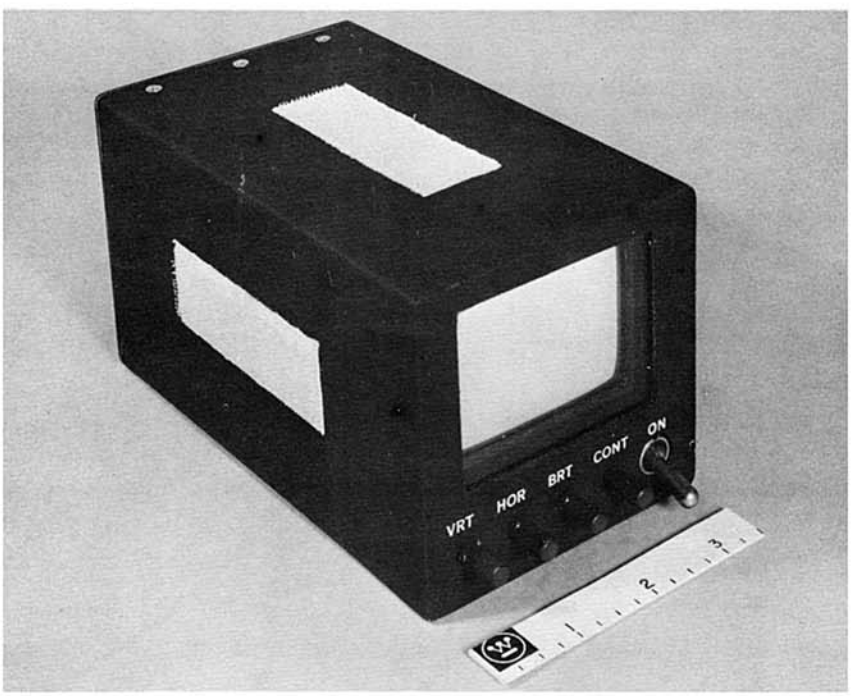

71-0158-PC-2

Figure 1. Apollo Command Module TV System

end and a seven (7) pin female Deutsch connector at the end which connects to the monitor.

(b) Cable-Camera to Spacecraft-NASA No. SEB16101081-707

This cable carries power from the spacecraft to the camera and video from the camera to the spacecraft. It is twelve (12) feet long and has a seven (7) pin Deutsch connector at the camera end and two (2) Cannon connectors at the Command Module end.

1.1.3 Command Module Camera Power

1.1.3.1 Camera

The input power to the camera is 17.5 ± 0.5 W, at a nominal input voltage of 28 VDC. This voltage can be varied by ± 4.0 V without affecting the performance of the camera.

1.1.3.2 Monitor

The input power to the monitor is 3.0 + 0, -0.5 watts, at a nominal input voltage of 28 VDC. This voltage may be varied by ± 4 VDC without affecting the performance of the monitor. Power for the monitor is supplied from the camera via the same cable that carries video signals from camera to monitor.

1.1.4 Physical Dimensions (Size and Weight)

The physical dimensions of camera, lens, and monitor are as indicated in the outlines drawings shown in Figures 2, 3, and 4.

The weights of camera, lens, and monitor are as shown below:

Camera - 11 pounds ± 0.1 pound
Lens - 1.3 pounds ± .1 pound
Monitor - 3 pounds ± .1 pound

1.1.5 Command Module Camera Controls

1.1.5.1 Camera Operational Controls

There are two (2) camera operational controls (external controls); (1) automatic light control (ALC) and (2) transmit standby switch (TS). See Figure 2 for the position of these switches on the camera. Power switching to the camera is done at the spacecraft.

The up position of the ALC switch is labeled AVG. In this position the ALC control loop responds to average scene illumination. In the down position, which is labeled PEAK, the ALC control loop responds to the peak illuminator in the scene. The use of this switch will be explained in the section on "System Operations".

The up position of the TS switch is the transmit position. In this position composite video signals (video, sync and blank) are coupled from the camera to the transmitter and to the monitor. The down position is the standby position, and in this position composite video is coupled to the monitor and only sync and blank signals (no video) are sent to the transmitter. This switch affords a method of turning off transmitted picture information without losing synchronization at the receiver.

1.1.5.2 Monitor Operational Controls (See Figure 3)

There are five (5) monitor operational controls, VRT (vertical), HOR (horizontal), BRT (brightness), CONT (contrast), and ON (power). The functions of these controls are identical to those in an ordinary commercial black and white television receiver. The vertical control stabilizes the picture along the vertical axis (roll). The horizontal stabilizes the picture in the horizontal axis (tear). The brightness

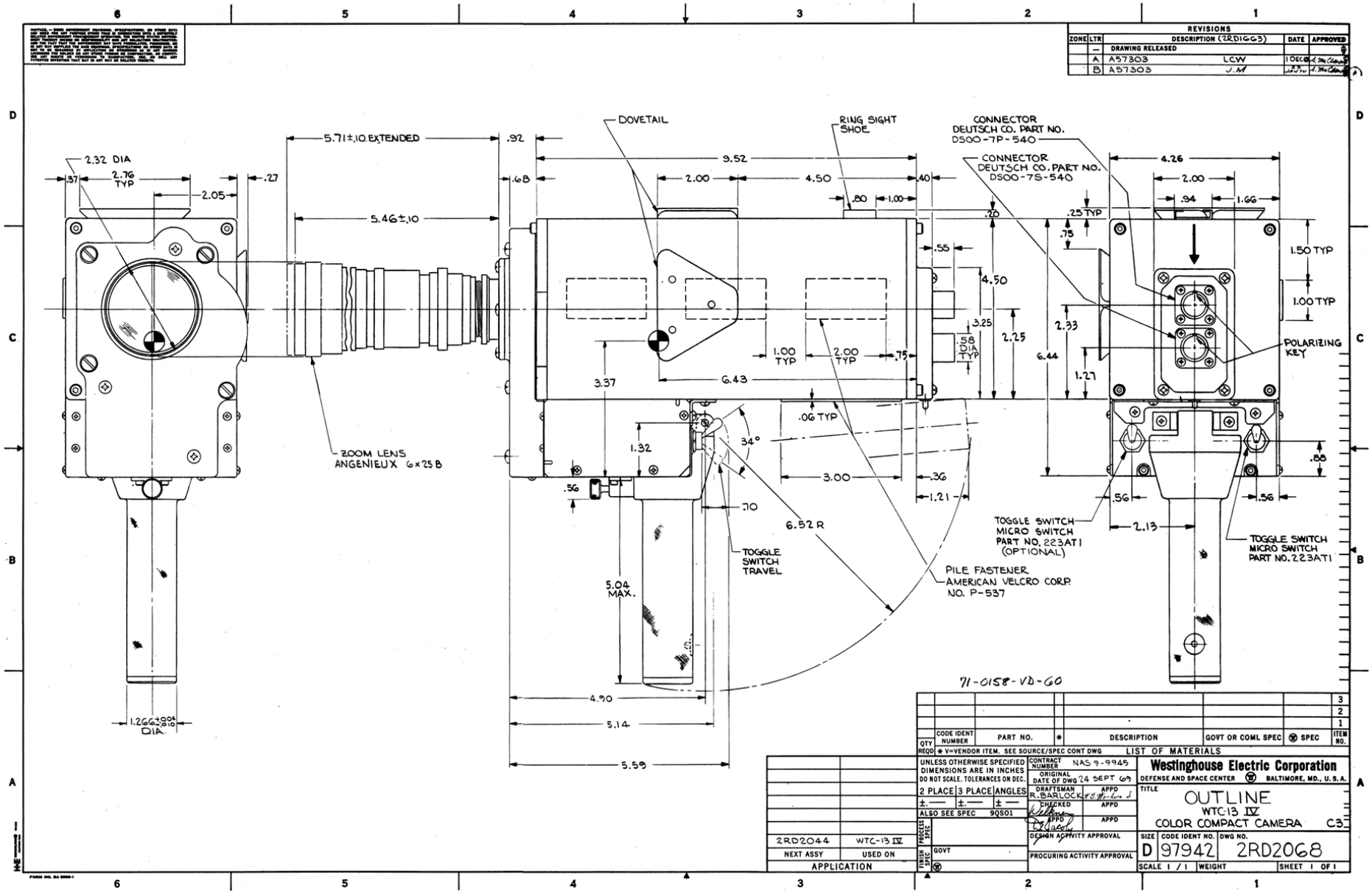

Figure 2. Television Camera Outline Drawing

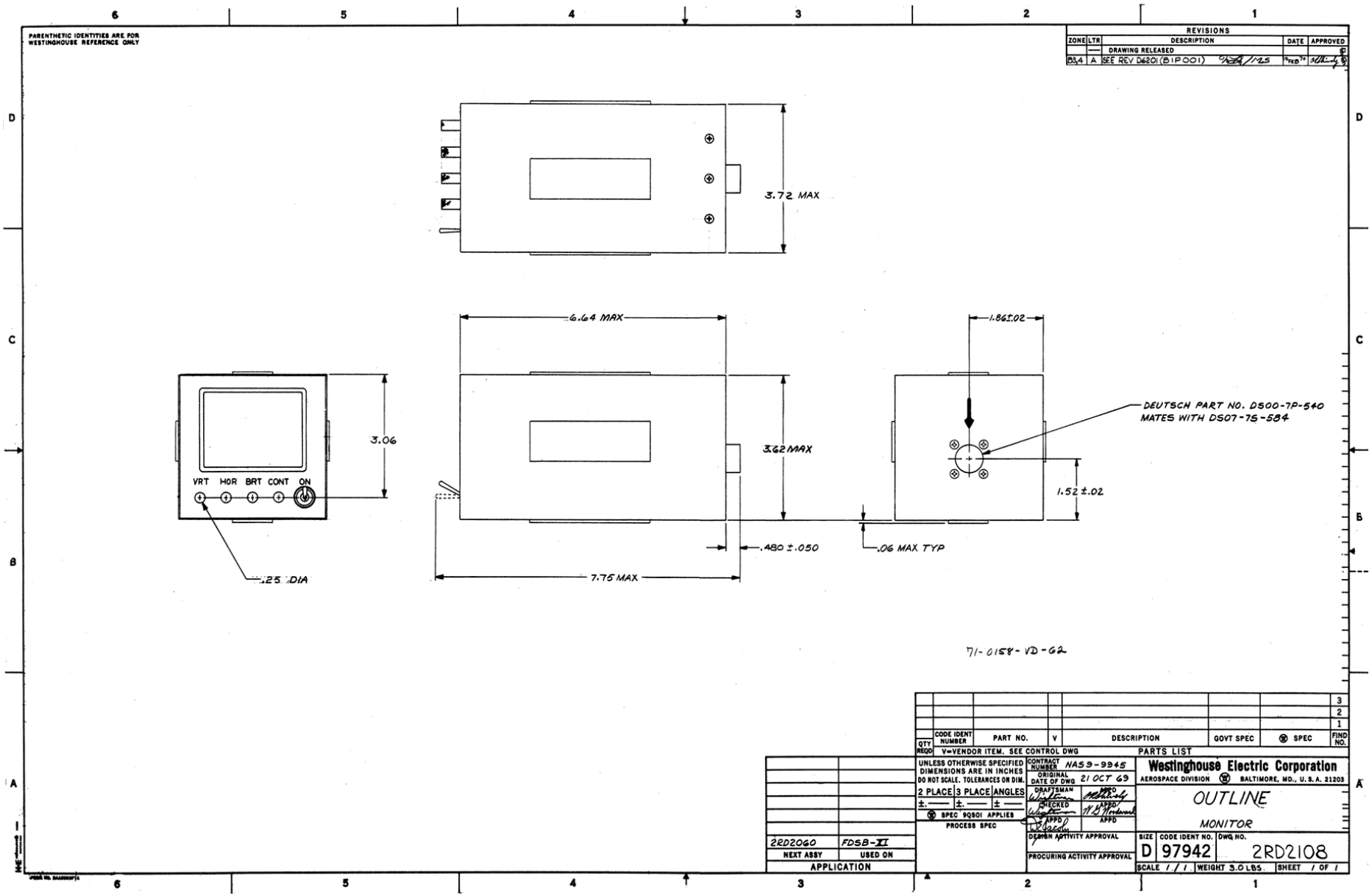

Figure 3. Flight Monitor Outline Drawing

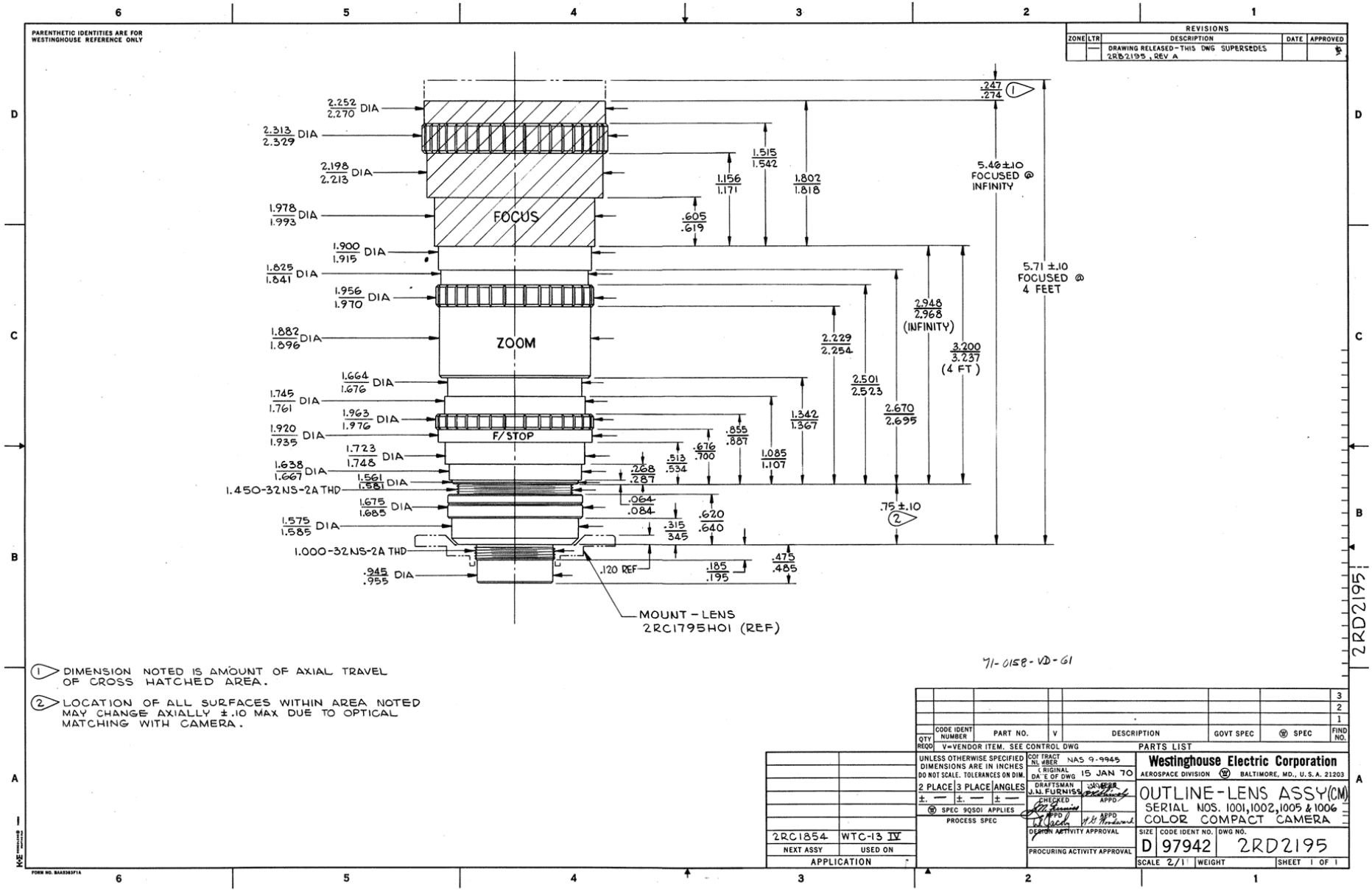

Figure 4. Zoom Lens Outline Drawing

control controls overall monitor brightness and the contrast control controls picture contrast. The toggle switch is the monitor power on/off switch. Power is on when the switch is in the up position.

1.2 Lunar Excursion Module (LEM) Camera Subsystem

1.2.1 Components

The LEM camera subsystem consists of the following components:

(a) Camera - NASA No. SEB16101147-701

(b) Lens - NASA No. SEB16101147-703

(c) Cable - (Adapter) NASA No. SEB16101147-705

(d) Cable - (LEM Vehicle) WEC No. 513R387

1.2.2 LEM Camera Cable

(a) LEM cable WEC No. 513R387, is a 100 foot cable that carries power from the LEM vehicle to the camera adapter cable and return video from the camera adapter cable to the LEM vehicle. The cable is terminated by Westinghouse space connectors. These connectors are specifically designed to be easily connected and disconnected in the environment of the moon as well as that of the earth and space vehicles.

(b) LEM Cable (adapter) NASA No. SEB16101147-705 is eighteen (18) inches long and carries power and video to and from the camera and the 100 foot lunar cable. It has a Westinghouse space connector at the one end and a seven (7) pin Deutsch connector on the other. The adapter cable has a built-in attenuation/ impedance matching pad. A schematic of the pad is shown in Figure 5. The pad reduces the amplitude of the camera output to the level required by the LEM transmitter.

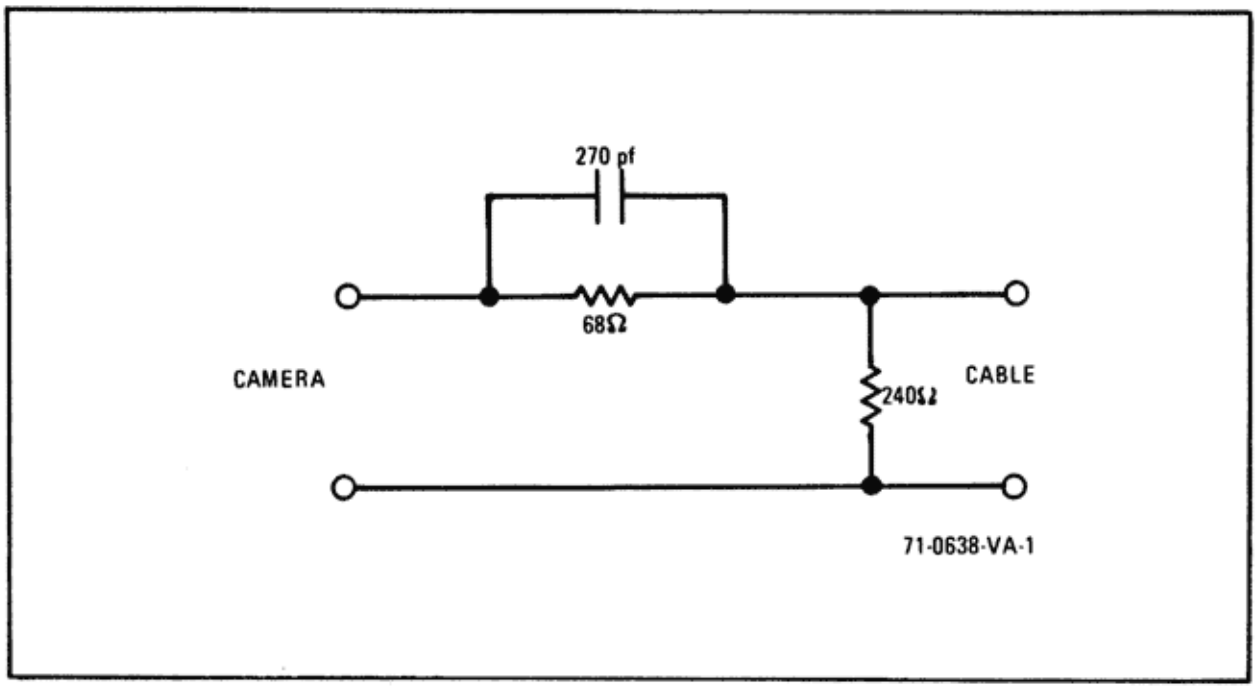

Figure 5. Attenuation Pad

1.2.3 LEM Camera Electrical & Physical Summation

Electrically and physically (except for the finishings) the LEM camera is identical to the CM camera, therefore, paragraphs 1.1.3.1 "Camera Power", 1.1.4 "Physical Dimensions" and 1.1.5.1 "Camera Operational Controls" apply to the LEM camera as well.

2.0 SYSTEM OPERATION

2.1 Lens Controls

2.1.1 General

There are three (3) lens controls: iris, zoom, and focus. See Figure 4.

The iris controls the amount of illumination reaching the TV sensor. The iris limits are F/4 to F/44. Light transmission through the lens varies inversely as F/number, therefore maximum light is transmitted through the lens at F/4 and minimum light is transmitted at F/44. The iris F/numbers are F/4, F/5.6, F/8, F/11, F/16, F/22, F/32, and F/44. A change from one F/number to the next will change the incoming light by a factor of 2 to 1.

The function of the zoom control is to change the field-of-view of the lens. The zoom range is from 25 to 150 mm (6 to 1 ratio). The zoom feature is of the constant illumination type, therefore the illumination at TV sensor does not change as the field-of-view is changed.

The function of the focus is to produce a sharp and distinct image at the image plane of the sensor. The lens will focus from 4 feet to infinity. The range markings on the lens indicate the distance from the front of the lens to the object in focus.

2.1.2 Zoom Control

The zoom limits are from 25 mm (1 inch) to 150 mm (6 inches). Within this range the field-of-view (FOV) of the camera is varied from 7° to 43° in the horizontal plane, and from 5.5° to 32° in the vertical plane. The reduction in FOV in the vertical plane is due to the 4 to 3, horizontal to vertical, aspect ratio of the camera.

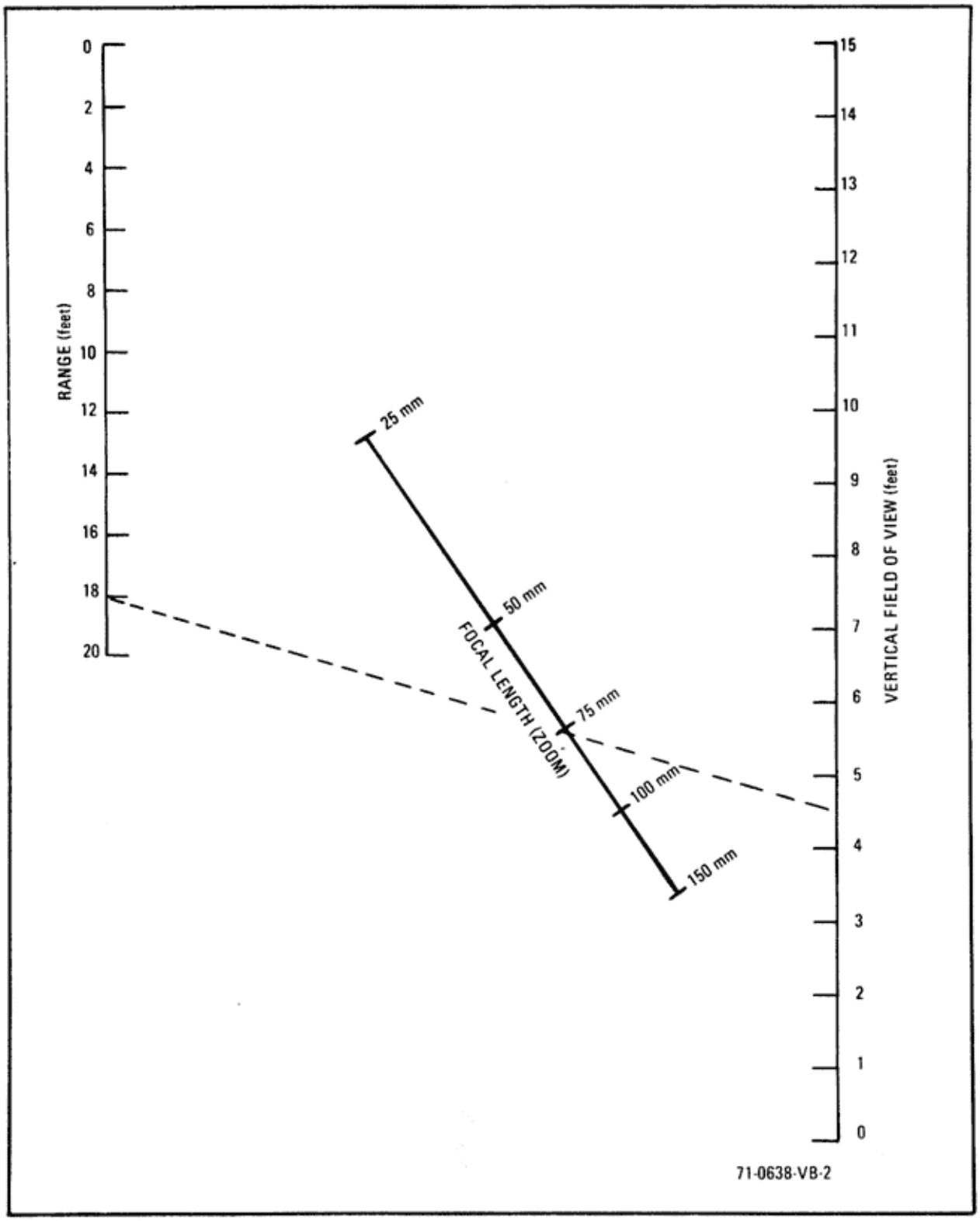

Figure 6A. Lens FOV vs Zoom

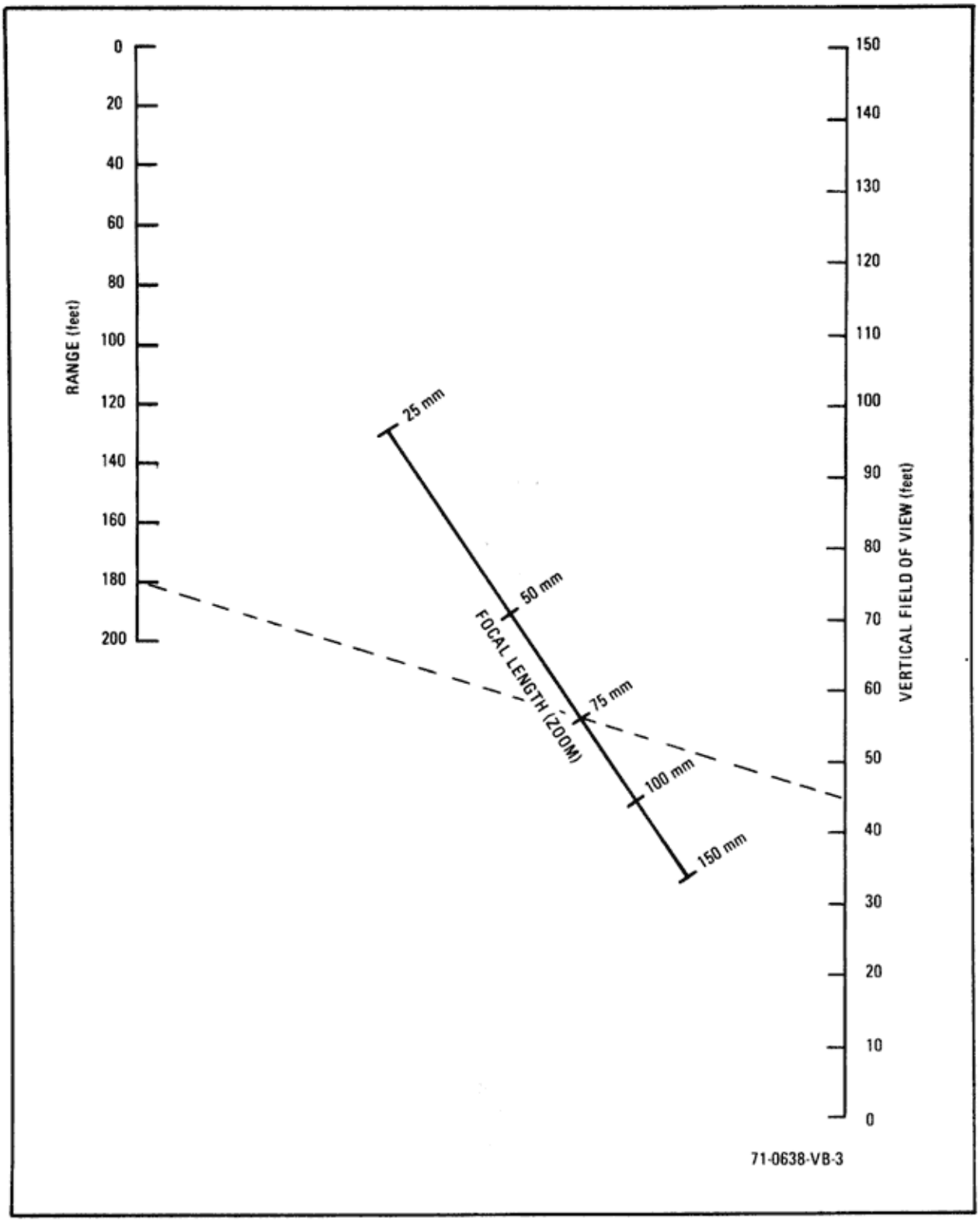

Figure 6B. Lens FOV vs Zoom

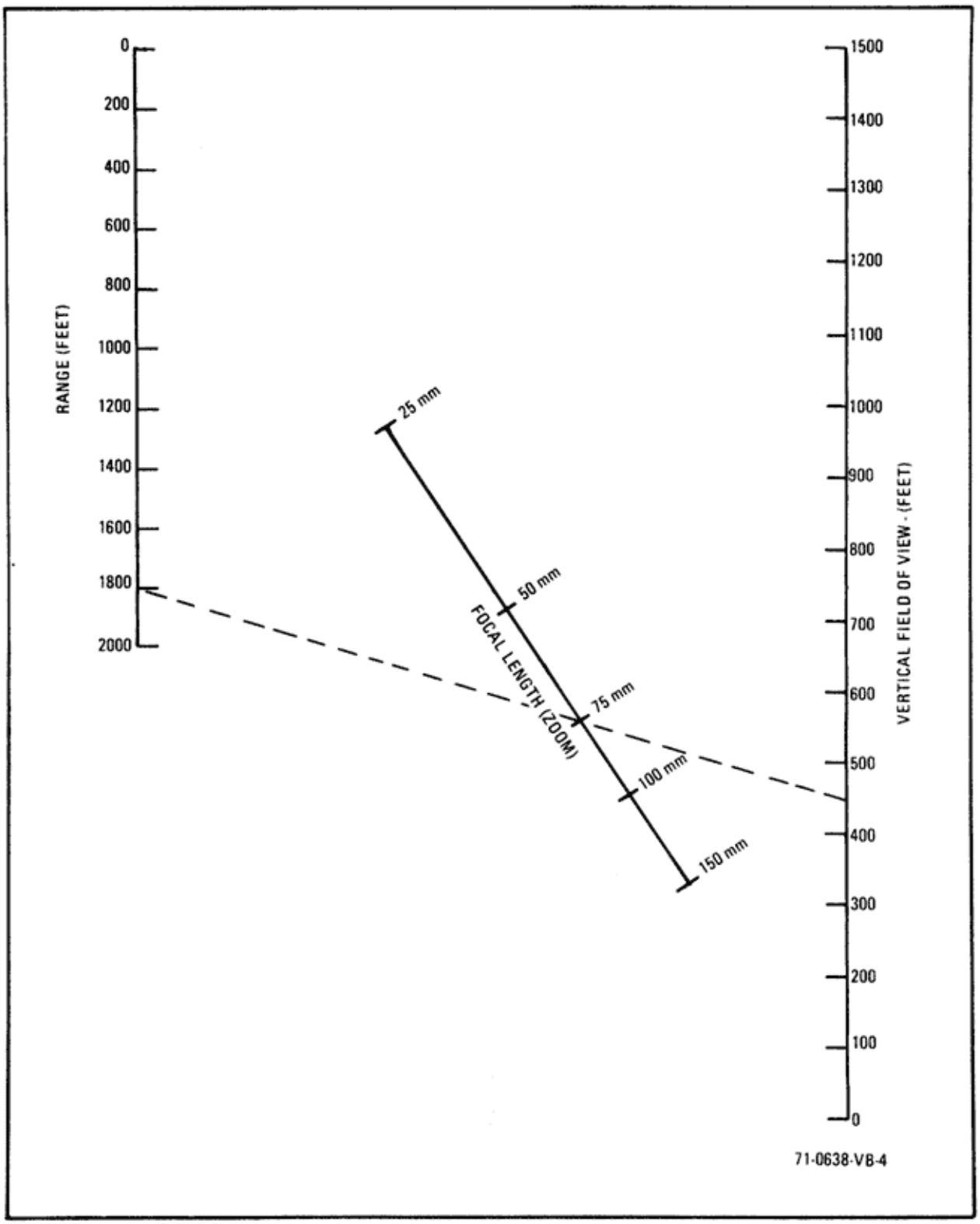

Figure 6C. Lens FOV vs Zoom

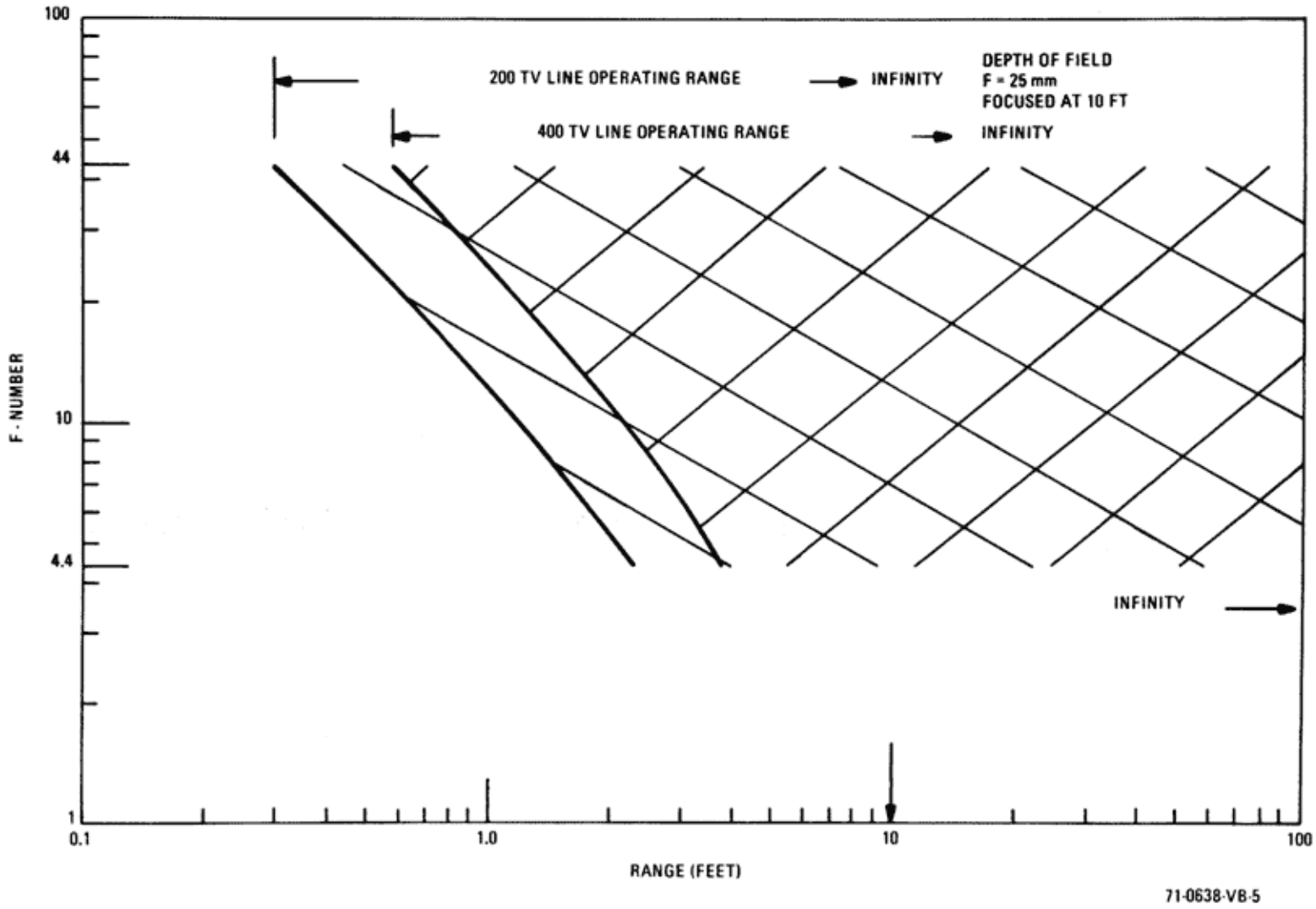

Figure 7B. Lens Depth of Field vs Zoom (25 mm)

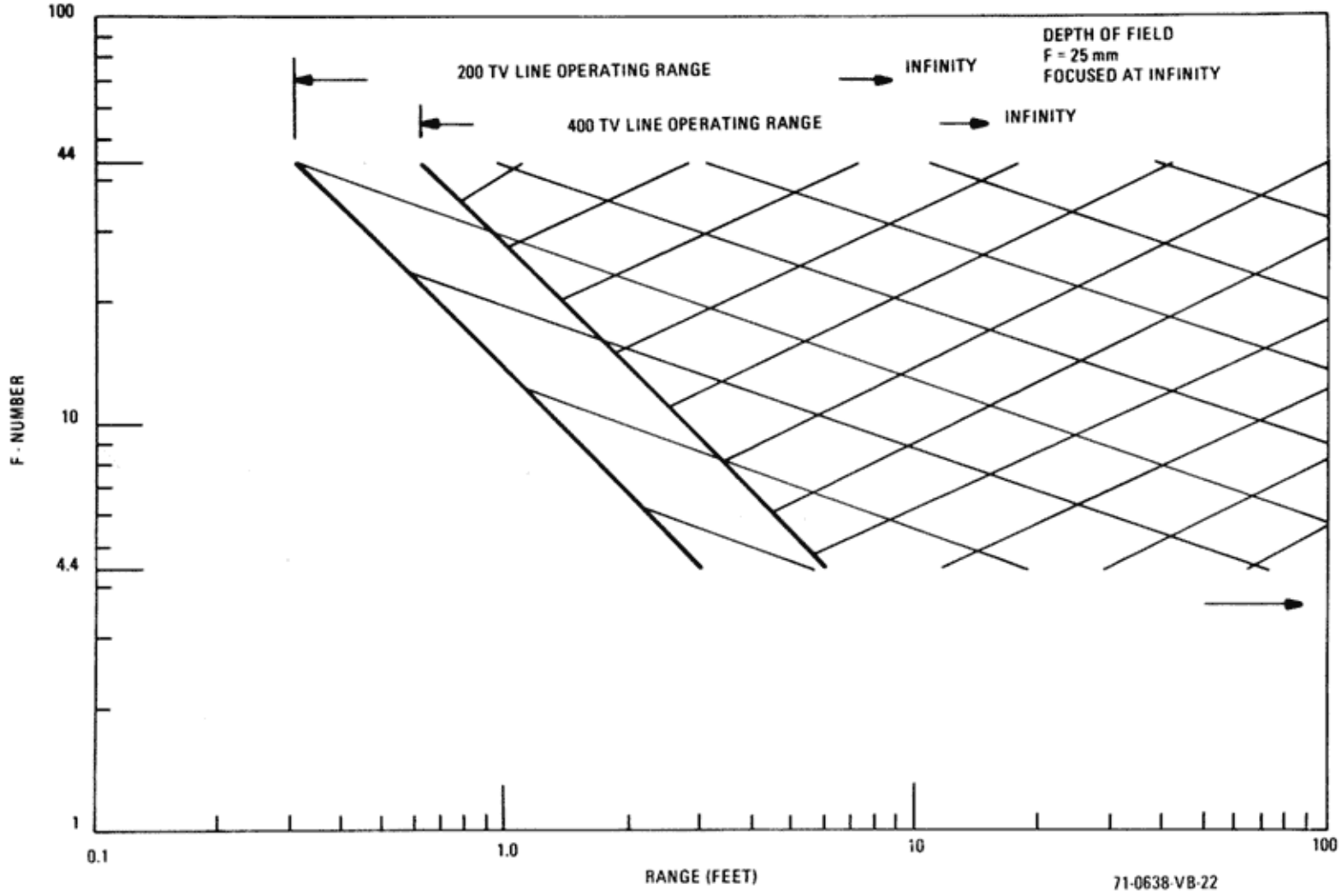

Figure 7C. Lens Depth of Field vs Zoom (25 mm)

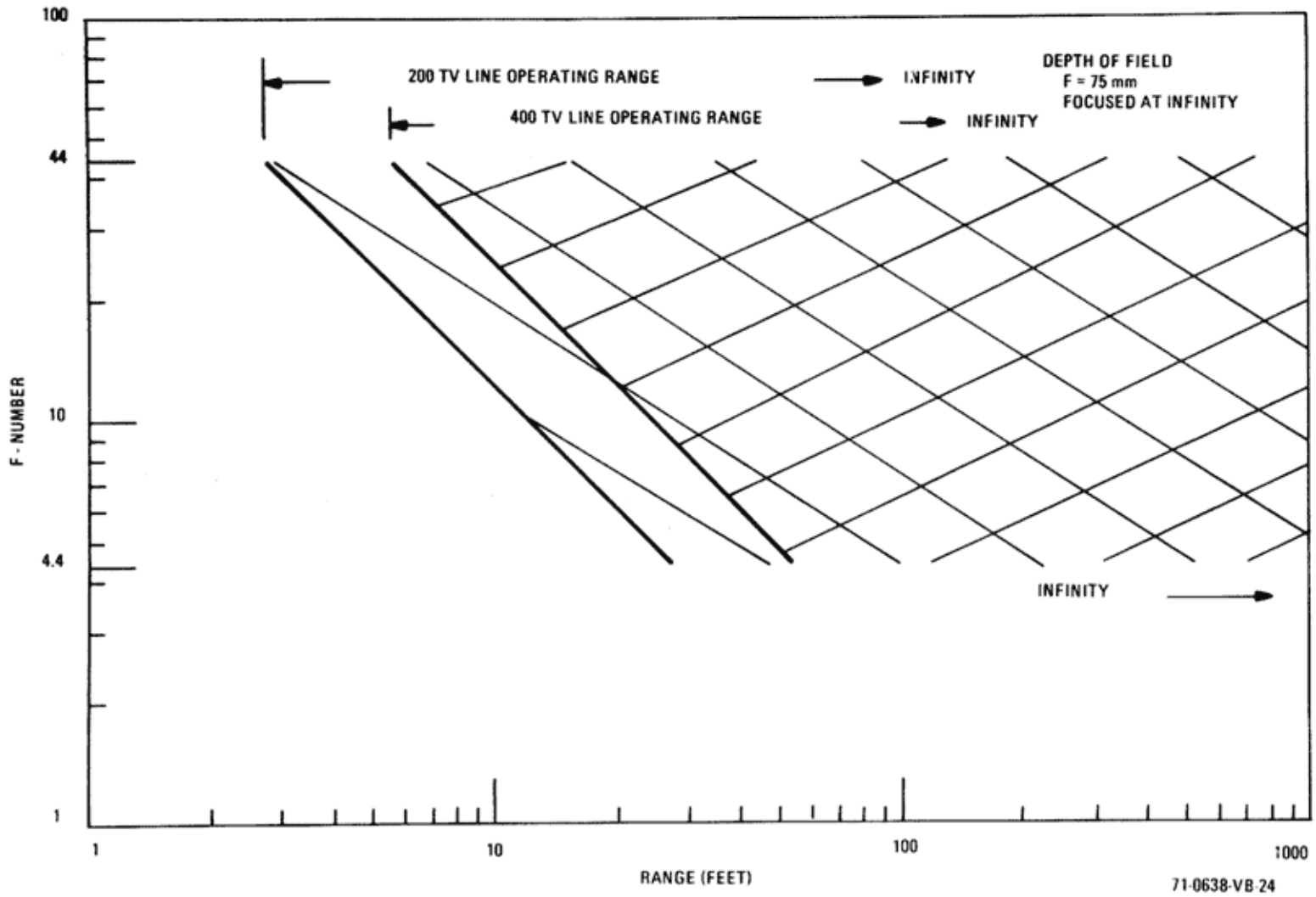

Figure 8C. Lens Depth of Field vs Zoom (75 mm)

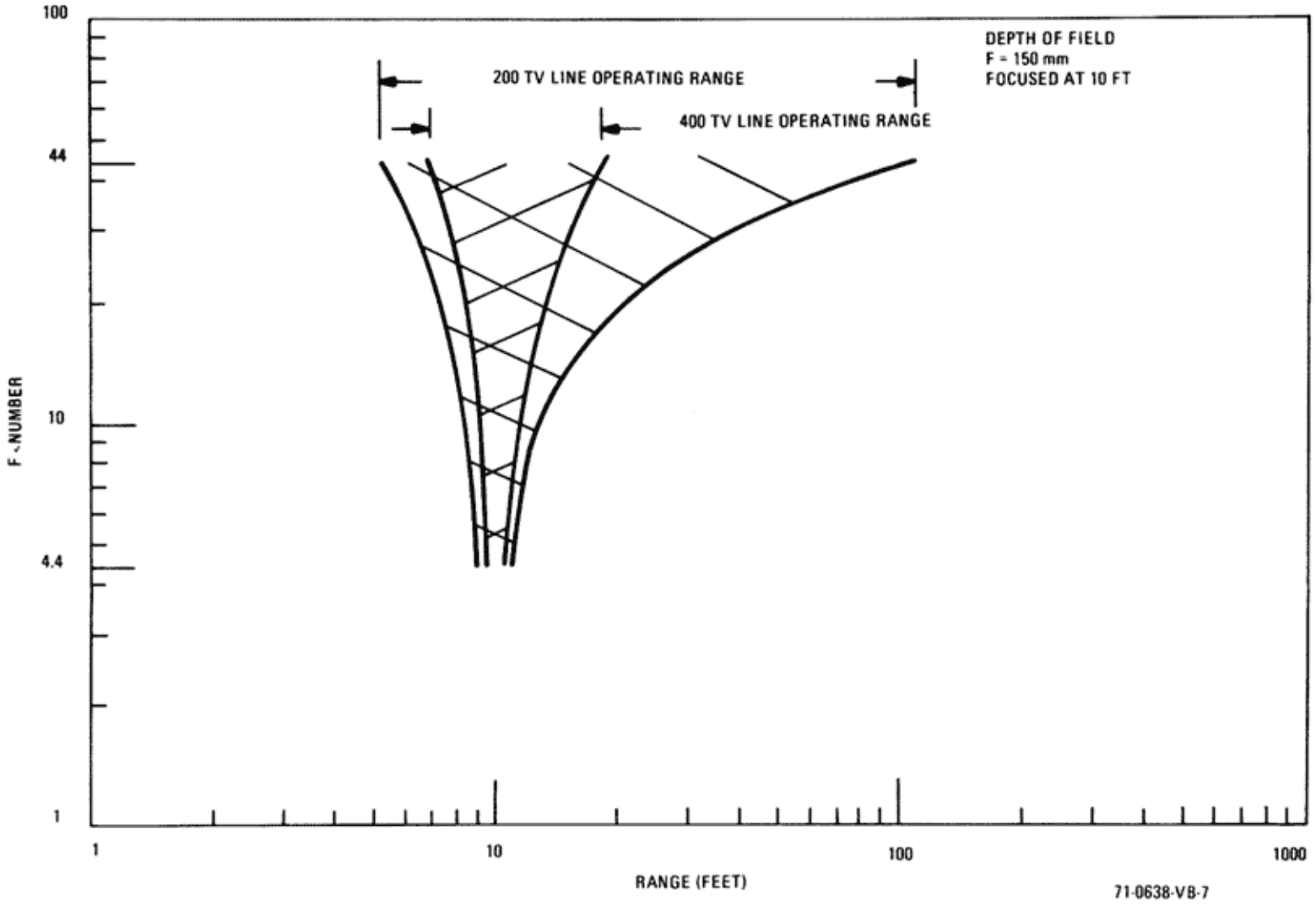

Figure 9B. Lens Depth of Field vs Zoom (150 mm)

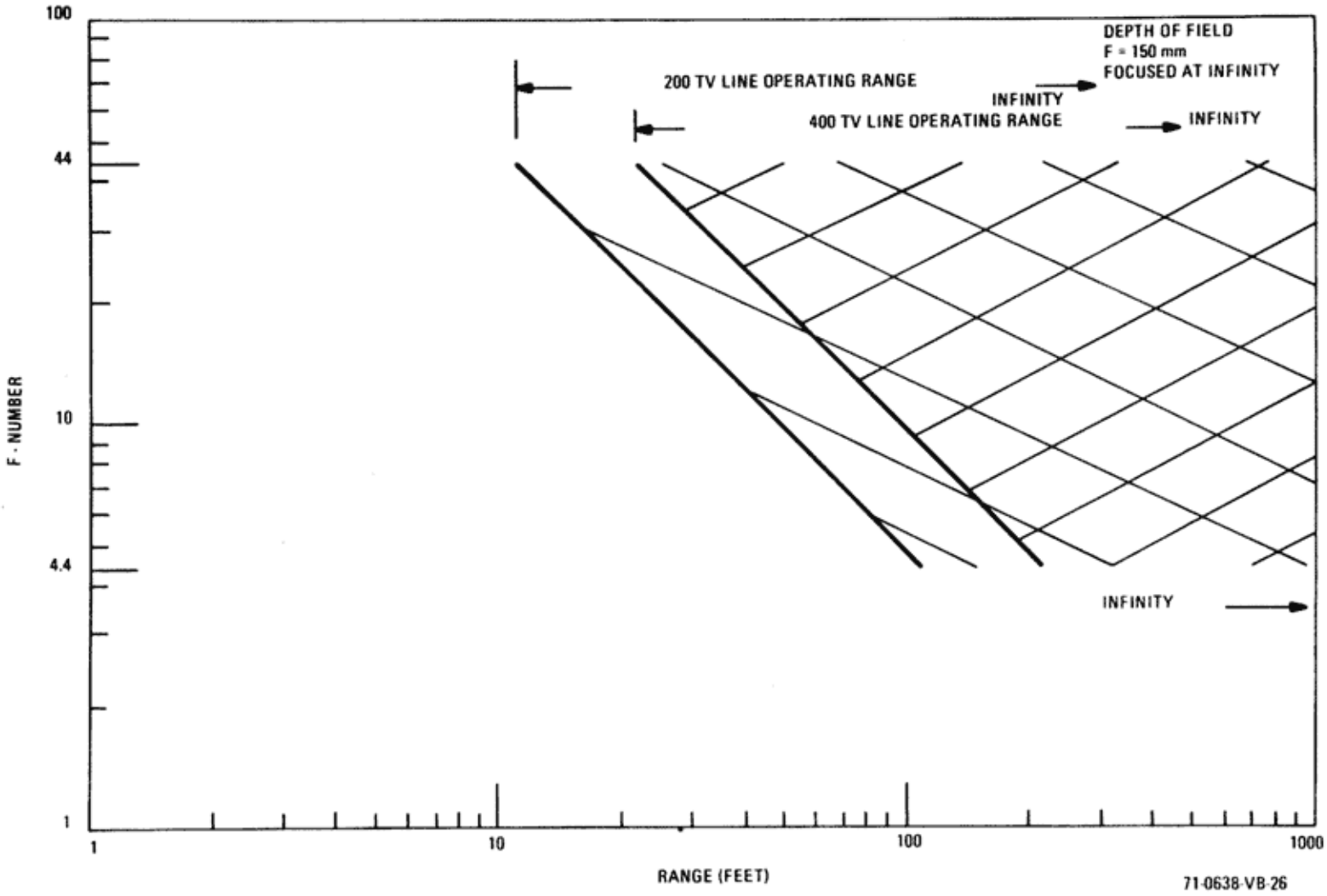

Figure 9C. Lens Depth of Field vs Zoom (150 mm)

Figure 6 shows the relationship between focal length (zoom), range (distance from camera), and vertical image height (FOV). From the graph it can be seen that at maximum zoom (150 mm), the FOV is nine (9) inches at a distance of six (6) feet in front of the camera. At minimum zoom (25 mm) and the same distance from the camera, the FOV is 54 inches. The zoom is continuously variable between these limits, and a linear relationship exists between zoom, FOV and distance.

2.1.3 Focus

The focus functions to produce a sharp and distinct image at the image plane of the sensor. Associated with focus is depth of field. Depth of field indicates a range, normal to the camera, in which all images projected by the lens on the image plane of the camera are acceptably sharp and distinct. The range markings on the lens focus control indicate the distance from the front of the lens to the objects in sharpest focus.

Depth of field is a function of F/number and FOV (zoom). Figures 7, 8, and 9 are graphs showing depth of field as a function of F/number and degrees of zoom (FOV). As indicated in these charts, the boundaries of the depth of field varies directly as F/number and inversely as zoom length; the greatest depth of field occurring at F/44 and 25 mm zoom. As an example, at F/10 and 150 mm zoom, when sharply focused on an object ten (10) feet in front of the camera, the depth of field is approximately fifty (50) inches, extending twenty (20) inches in front of the ten (10) foot mark to thirty (30) inches beyond it. At twenty-five (25) mm zoom the field extends from eighty (80) inches in front of the ten foot mark to infinity beyond it.

The charts also indicate that there is a reduction in the boundaries of the depth of field at the higher resolution line limits.

2.1.4 Aperture Control

Varying the aperture opening of the iris diaphragm, (F/number), controls the illumination reaching the TV sensor, and in so doing controls the signal-to-noise ratio of the signal output of the camera. The F/number limits of the iris diaphragm is from F/4 to F/44 and within these limits light transmission is changed by a 100 to 1 ratio. In addition to the iris diaphragm as a means of controlling camera output signal, the camera incorporates an AGC/ALC loop. This loop enables the camera to sustain a nearly constant output signal under conditions where light variations are as much as 1000 to 1. This is in addition to the 100 to 1 range of the iris. The iris control range is used as a supplement to the AGC/ALC control range. The best setting for the iris is found by setting it to F/44 and reducing the F/number beyond the point where there is no further change in picture contrast.

2.2 Automatic Light Control (ALC)

The ALC may be operated in a peak or average mode. The scene content determines which mode should be used.

A scene that is 100% white is an all white scene. A scene that has no white is a 0% white scene. The white content of a scene can, of course, take on any value between 0 and 100. When the white content of a scene is in excess of 10%, the ALC should be operated in the average mode. The majority of the operating scene content of the camera will be within these limits.

The peak mode of operation is used when the white content of the scene falls below 10% (figure 10). The conditions under which one or the other mode of operation is to be used is not critical since nearly all scenes contain not just white and black but also many shades of gray. However, operating the ALC in the average mode when obviously the peak mode is called for can result in damage to the TV sensor. With low white areas in the scene contents, the ALC loop cannot generate a sufficient amount of control voltage; the resulting rise in acceleration voltage can damage the sensor target electrode. Also, the reduction of control voltage in the ALC loop can cause overload, resulting in the saturation of one or more of the primary colors in the scene causing a shift in the color rendition.

The effect of the ALC in the peak mode when the average mode should be used depends on the scene content. If the scene is "flat", that is having no small bright spots, the peak mode will perform approximately as the average. If, however, there are some appreciable high light points, they will determine the system gain and cause all low light level signals to be washed out.

2.3 Turn-On Procedure

2.3.1 Command Module Camera

2.3.1.1 Cable Connections

Caution: Before connecting the camera power cable to spacecraft power receptacle, ensure that the spacecraft TV camera power switch is in the "Off" position.

The power/video cable, SEB16101081-707, connects the camera to the spacecraft console. The end of the cable that is attached to the camera has a seven (7) pin female Deutsch connector. Only four (4) of the pins are active.

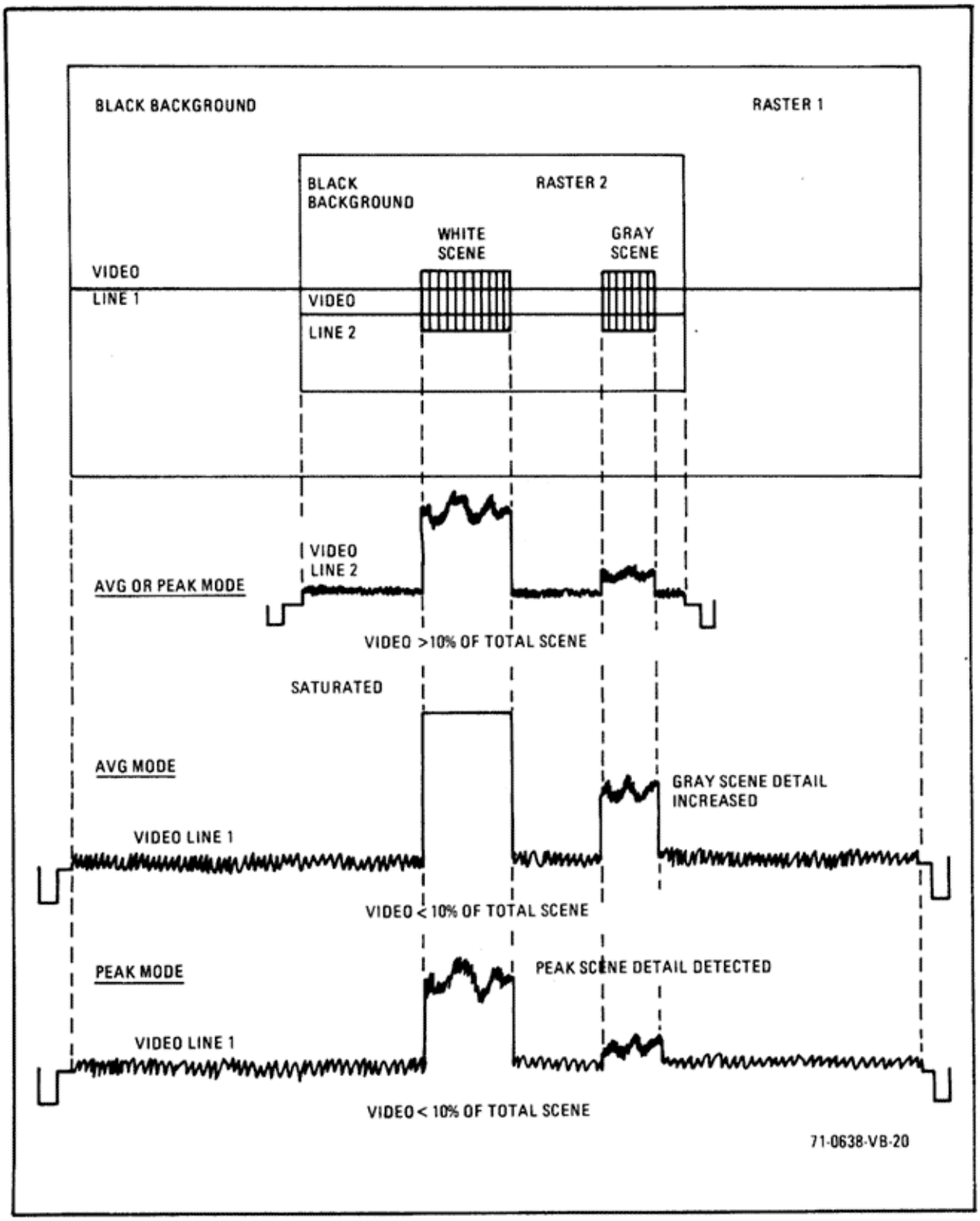

Figure 10. TV Scene

Deutsch connectors are a pressure locked type; that is, the connector is held to the receptacle by means of pressure. The outer section of the connector is spring-loaded. To engage the connector and receptor first align the guide pins, then grasp the outer section of connector and firmly push it forward as far as it will go. To disengage the connector, grasp the outer section and pull it back away from the receptor as far as it will go. This relieves the pressure that keeps the two together. While maintaining the outer section in this position, pull the connectors apart.

The opposite end of the cable has two (2) Cannon connectors; a two (2) prong male for input power, and a coaxial connector for video. These connectors have captive threaded nuts, and connections are made to the console by aligning the guide pins to those in the appropriately marked receptables, pushing the connectors in and tightening the captive nuts with a clockwise rotation.

The camera to monitor cable, NASA No. SEB16101081-709, has a seven (7) pin Deutsch male connector at the camera end and a seven (7) pin Deutsch female at the monitor end. Connections are made to the camera and monitor in the manner described in the previous paragraph.

2.3.1.2 System Adjustments

Turn the iris setting to F/44. Place the Transmit/Standby switch in the "Standby" position. Place the ALC switch in the peak mode. Place the monitor power switch in the "On" position. Set the monitor brightness and contrast controls to their mid-positions. Ensure that the lens cap is in position. Ensure that the precaution concerning pointing the camera at high light sources is being observed. Apply power to the

camera. The application of power may be detected by the sound of the motor and color wheel assembly.

After a few seconds, a raster will appear on the monitor. Adjust the brightness control for the desired brightness. Adjust the horizontal and vertical hold controls if there is any evidence of tearing and/or rolling of the raster. Uncap the camera lens. Scene illumination determines whether or not an image appears on the monitor. If no image appears or the image that appears has little contrast, reduce the F/number of the lens until there is no further change in image contrast. Use the lens focus control to bring the image into focus. Adjust the zoom control for the desired field-of-view. Adjust contrast control of monitor for desired contrast.

As indicated in paragraph 2.2 - ALC, the scene content determines which mode of the ALC should be used. By initially setting the ALC to the peak mode, risk to sensor damage is avoided should the ALC be in the average mode when the peak mode is needed.

If after the scene has been properly focused and the FOV adjusted and the scene content dictates the AVG mode of ALC operation, throw the ALC switch to the AVG mode.

To transmit the camera signal, throw the Standby/Transmit to Transmit.

2.3.2 LEM Camera

2.3.2.1 Cable Connections

Two (2) cables are required to complete the connection between the LEM vehicle and the LEM camera; the 100 foot lunar surface cable and the eighteen (18) inch adapter cable. The 100 foot lunar cable has a male space connector on one end and a female space connector

on the other. The male connector fastens to a bulkhead connector on the LEM vehicle.

The adapter cable has a space connector at one end and a seven (7) pin Deutsch connector at the other. The space connector on the adapter cable is mated with the space connector on the 100 foot lunar cable by the procedure illustrated in Figure 11. The Deutsch connector mates with the connector on the LEM camera by the method previously described.

2.3.2.2 System Adjustments

Procedure is the same as the one for the CM Camera.

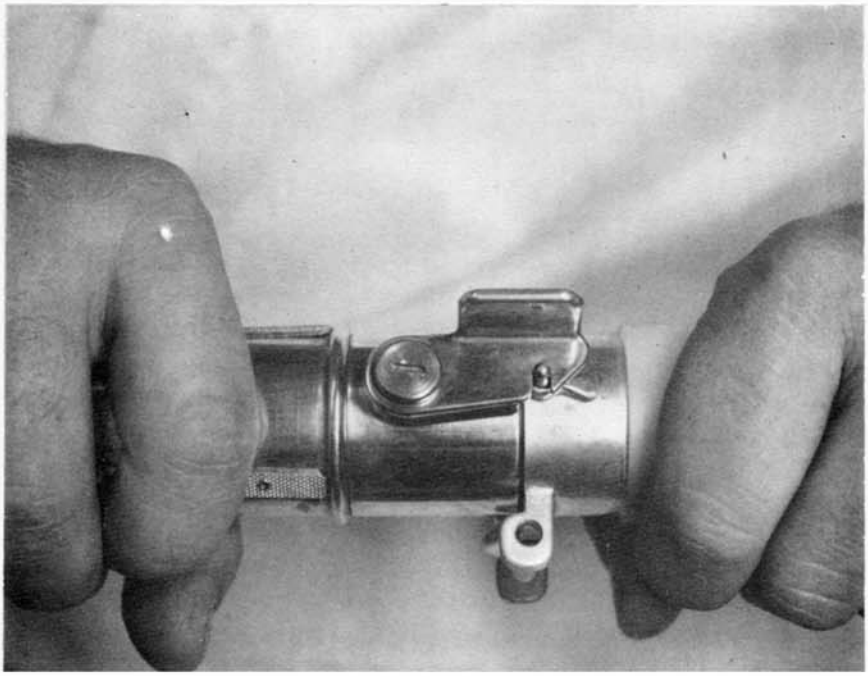

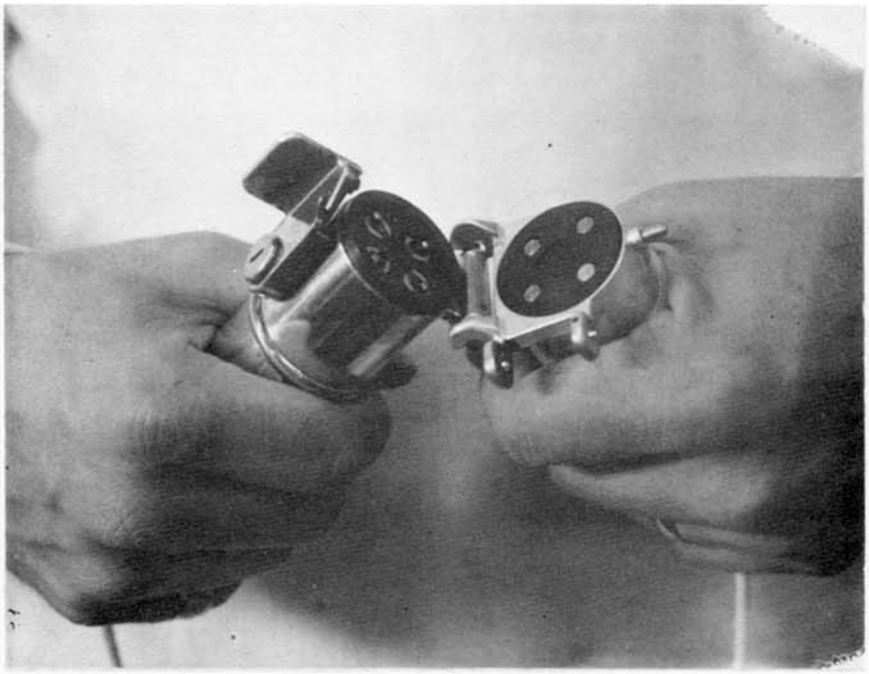

Figure 11. Connector Mating

compensation take place. The signal then goes to the post amplifier for additional amplification. In the video process, horizontal and vertical synchronizing and blanking pulses are added.

The ALC loop detects the amplitude of the video signal and generates a voltage that controls the output of the high voltage power supply. This in turn varies the gain of the sensor such that the video output of the camera remains constant under varying lighting conditions.

A sync generator, driven by a crystal controlled oscillator, generates a complete EIA sync/blank format. Drive pulses from the sync generator are used to control the timing of the horizontal and vertical sweep generator. The horizontal and vertical sweep generators in addition to producing the camera electron beam deflecting signals, also provide signals for the sweep fail circuit which functions to cut off the sensor's electron beam in the event of a failure in one or both of the sweeps. This prevents damage to the sensor. The sync generator also supplies input to the pulse forming logic circuits. The circuits derive the logic signals that are used, after amplification in the motor drive circuitry, to operate the color wheel motor.

A magnetic pickup loop, situated in the camera housing, has a signal induced into it each time a magnet, situated on the periphery of the color wheel, passes by. This pulse, after amplification in the wheel pulse amplifier, is used to phase the synchronizer to the color wheel motor.

DC/AC and AC/DC inverters generate the low voltage power required to operate the camera electronics.

3.0 THEORY OF OPERATION

3.1 General Description

The Apollo color camera uses the field sequential system of color pickup and transmission. In this system the three (3) primary colors, red, green, and blue, are generated in sequential fields of video signals and transmitted as a monochrome video signal. This is in contrast to the NTSC color system in which the primary colors are transmitted simultaneously. Ground support equipment converts the field sequential signal to the NTSC standard color signals.

A block diagram of the color camera is shown in Figure 12. The color camera consists of a monochrome camera that has been adapted for color by the addition of a color wheel, motor, motor drive, and motor synchronization.

The monochrome camera consists of a low light level imaging tube, a video preamplifier, a post amplifier, video processor, a sweep/synchronizer, AGC/ALC loop, and a high and low voltage power supply. The scene to be televised is focused by a lens through one of the color filters on the filter wheel, onto the face plate of the sensor. The sensor converts this information into an equivalent electron pattern and stores it on its target. A scanning electron beam, positioned by the horizontal and vertical sweep circuits, reads this signal off the target, generating the video signal. A motor positions a color filter in front of the sensor during the scanning of a field. When that color field is completed the motor rotates another filter in front of the sensor and the operation is repeated. The video signal is coupled from the sensor into the preamplifier where the amplification and frequency

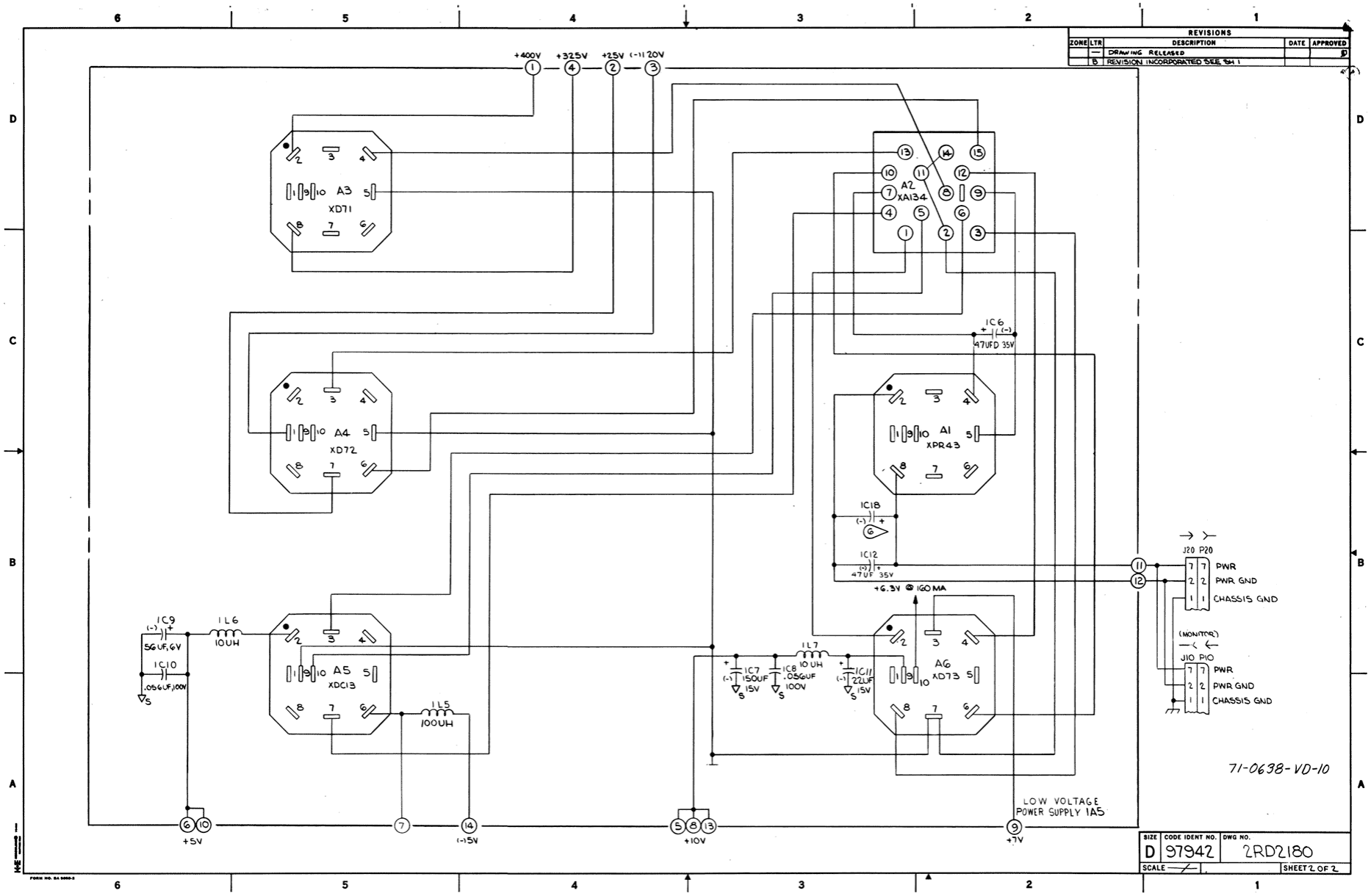

Figure 12. Camera Block Diagram (Sheet 2 of 2)

3.2 Circuit Theory

3.2.1 Imaging Section

The imaging tube in the camera may be a secondary electron conduction (SEC) tube or an electron bombarded silicon (EBS) tube. The operation of either tube, except where noted, is as follows:

A lens focuses the scene to be televised onto the faceplate of the imaging tube. The light causes the tube's photocathode to emit photoelectrons which are focused by an electrostatic field onto the imaging tube's target. See Figure 13. In the case of the SEC these photoelectrons penetrate the target and cause the release of secondary electrons. The target gain is proportionate to the number of secondaries released. These secondary charges form a pattern that corresponds to the image focused on the faceplate. In the case of the EBS, the photoelectrons generate minority carriers (holes) in the target. The target gain is proportional to the number of 'holes' generated. These 'holes' form a pattern that corresponds to the image focused on the faceplate. If light continues to enter the faceplate the charges continue to build up, the target thus acts as an integrator. When the electron beam scans it, the target is discharged creating a current in the target lead. A resistor connected in series with this lead develops the video signal voltage as a result of this current.

The color wheel is interposed between the lens and the sensor. The wheel contains six (6) color filters; two each of red, green, and blue. Between each filter is an opaque region, required to prevent color mixing. During the time interval that the opaque segment is in front of the sensor, information that had been stored

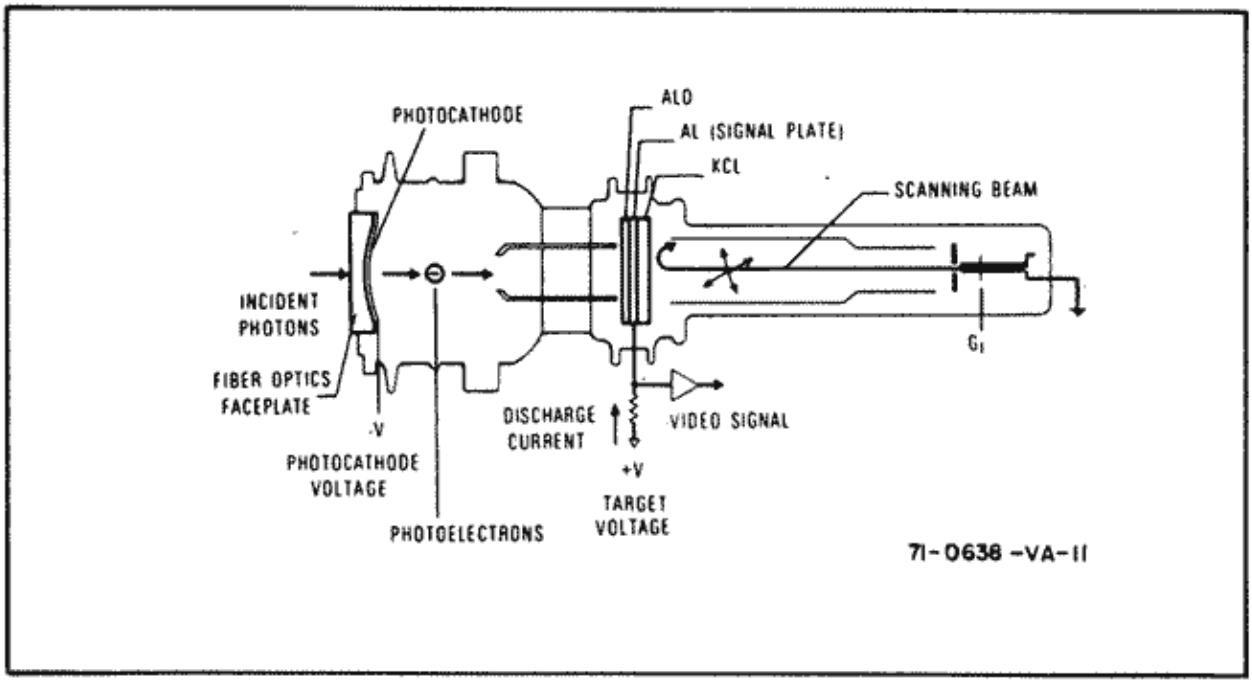

Figure 13. SEC Image Tube Layout

during the previous field is read off by the scanning beam. As a result, when the next color filter comes before the sensor all previous information will have been removed. It is necessary that the wheel motor be synchronized with the scanning beam to ensure that the scanning beam read the target during the time interval that the opaque section of the filter is in front of the sensor. This is accomplished through a small magnet placed along the periphery of the wheel. Located in the camera housing is a pickup loop. Each time the magnet rotates past the pickup loop, a voltage is induced into it, thereby generating a signal that establishes the relative position of the wheel. This signal is amplified in the wheel pulse amplifier and is used to set the sync generator, and therefore the sweeps, with the color wheel position.

The color wheel is driven by a synchronous motor operating approximately at 1798.2 RPM. A 3 to 1 gear reduction reduces the wheel speed to 599.4 RPM or 9.99 RPS. The six (6) segments on the wheel with 9.99 RPS of the wheel results in the standard field rate of 59.95 hertz.

There are light losses due to the color wheel, but they are typical of what is found in a color television camera. However, the low lighting conditions encountered in the spacecraft necessitates the use of a sensor of greater sensitivity than would be encountered under studio conditions. For example, the losses through the color wheel assembly and the T-5 lens is approximately 1300. The illumination within the confines of the spacecraft may be on the order of 1 ft/C. The energy received on the faceplate of the image tube would then be about 10^{-3} ft/C. Both the SEC and EBS image tubes

used in the camera generate a S/N of approximately 30db under these conditions.

3.2.2 Camera Circuit Description

3.2.2.1 Video Circuits

3.2.2.1.1 Preamplifier (Refer to Figure 14)

The image tube develops a signal across R2 (on 1A1) which is coupled into the gate circuit of Q1. This is amplified across R5 and fed to the base of the common emitter Q2, amplified in the collector circuit and used to drive the emitter follower Q3. The signal is AC coupled through C12 and the peaking network of C14, R13 and R14.

Feedback to the input is accomplished by the combination of R12, C9, R9 and C7.

3.2.2.1.2 Post Amplifier (Refer to Figure 15)

The video signal is fed into pin 12 of the video board 1A3, pin 12 of module 2A1, (pin 9 and 10 of Z1) amplified and developed across 1A3R1, the gain control. The signal is then coupled through C1 in 2A1, R2 and C2 into pin 10 of Z3 to be amplified and fed out on pin 8 of Z3. The significance of 1R3 and 2A1Z2 will be explained under AGC control.

The output of pin 8 of Z3 bypasses the aperture correction circuit when S1 is switched to R6. In this position pin 10 of Z4 receives the video signal, amplifies it and then it is coupled through R7 and C11 into the mixer circuit in module 2A2.

3.2.2.1.3 Mixer Circuit (Refer to Figure 15)

The video signal is coupled through C11 in 2A1, into the base circuit of a feedback pair driver, Z2 in module 2A2, that has two output paths from its emitter output. The path to the emitter of the common

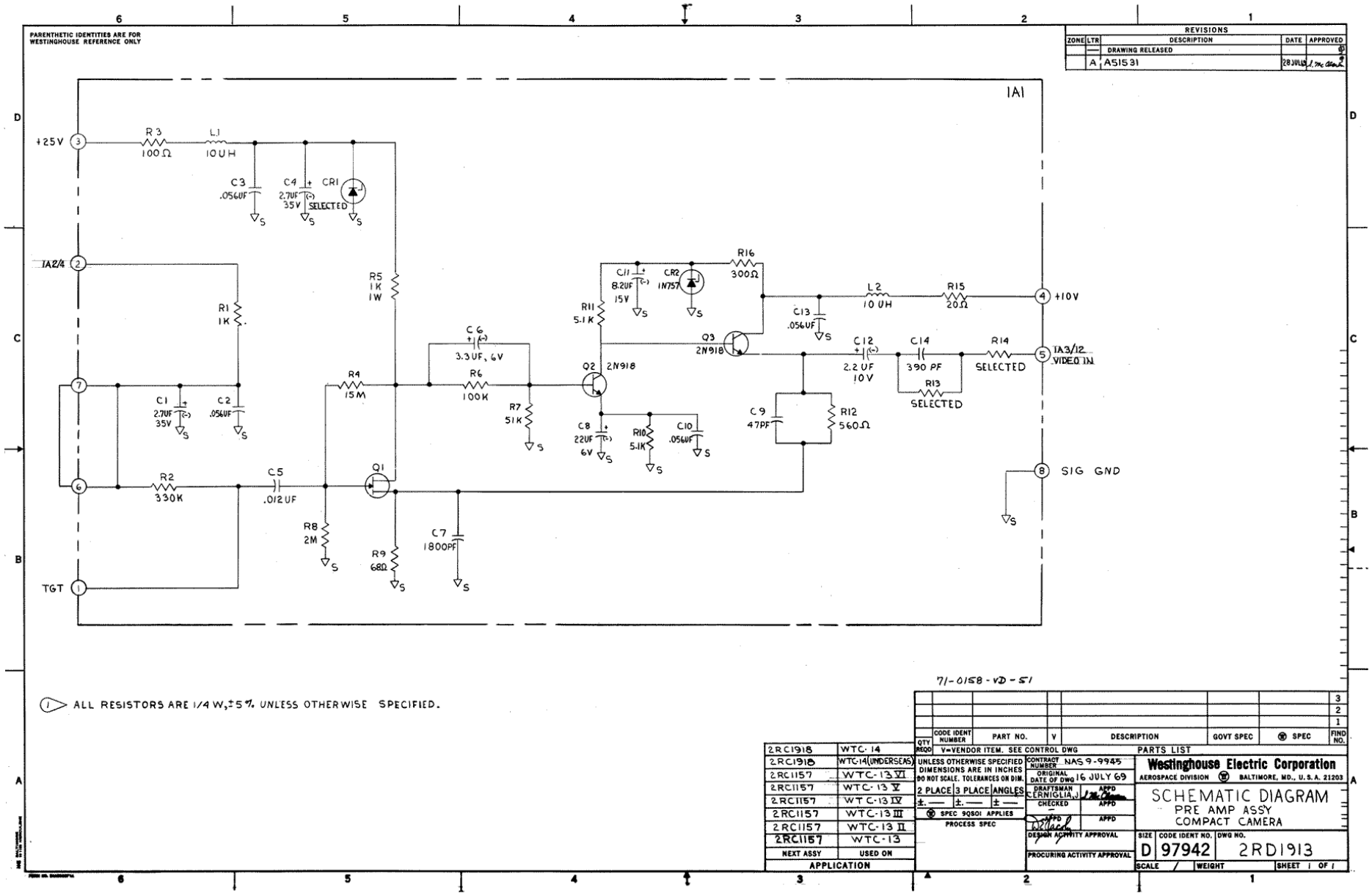

Figure 14. Preamplifier Schematic

base amplifier is the ALC path. The path through R1 is the video path.

The video path is of immediate interest. The transistor shunting the feedback pair base circuit is the clamping transistor whose base circuit receives a sync drive through the logic circuit of Z1. In the feedback pair emitter circuit resistor R1 and R22, which is selected, set the value to which the clamping capacitor C11 (in 2A1) will charge. The selected resistor (R22) is said to select the video black level. The output of this voltage divider feeds the emitter of a switch (pin 2 of Z2) which is saturated during the active line time. The video is then coupled through the low pass filter L1, C4, C3 and L2 to the output driver Q5. The output signal is developed across R17. During the blank time the base circuit of the saturated switch is driven by the blank pulse through the logic circuit of Z1. This essentially cuts the video off from the output during blank time. Also during blank time, pulses occurring in the times of the front and back porch take the output of pin 4 on Z1C to ground. Since the video is off during this time, the video output is a result of the division of R3, CR1 and R5. During the sync time the logic circuit opens up, Q5 opens up and the output is at a negative voltage level as determined by R17, the external load resistor, and -5 volt supply.

Pulses occurring at the front and back porch times are formed by adding the mixed blank and inverted mixed sync inputs to pins 9 and 10 respectively to Z1C.

CR8, a zener diode functions to limit the amplitude of the video output of Q5. The circuit operates as follows.

CR8 is an eight (8) volt zener diode and is biased by the -5.0 volt supply. It is connected to the collector of the output transistor Q5, and the total voltage across is the sum of the bias and the output of Q5. When the video output of the amplifier exceeds three (3) volts, making a total of 8 volts across the zener, the zener diode begins to conduct and limits the video to approximately the three (3) volts value.

3.2.2.1.4 Aperture Correction (Refer to Figure 15)

When the output of Z3 (on 2A1) is connected to R5 the input of Z4 is connected to R16 in the emitter of Q4.

As the video signal passes through R5 it appears at the junction of C1 and DL1. It is then coupled to the base of Q3 and is amplified at the junction of R11 and R2. Also, it passes through DL1 (delay line) where it is shifted linearly in phase as the frequency increases. The signal is then passed through Q1 into the collector circuit of Q2. The resulting signal at the collector of Q2 is the sum of the amplified signals of Q2 and Q3. It is then fed through the emitter of Q4 into the input of Z4 in 2A1, on pin 10.

At zero frequency there is no phase shift through DL1 and a positive input to DL1 appears as a positive signal at the collector of Q2 and as a negative signal at the collector of Q3. The amount of summing is contingent upon the setting of R2 but it can be seen that the low frequencies are attenuated.

As the frequency increases, the phase across the delay line DL1 shifts linearly towards 180°. At some frequency the collectors of Q2 and Q3 are in phase and it can be seen that the signal is increased at the high frequencies.

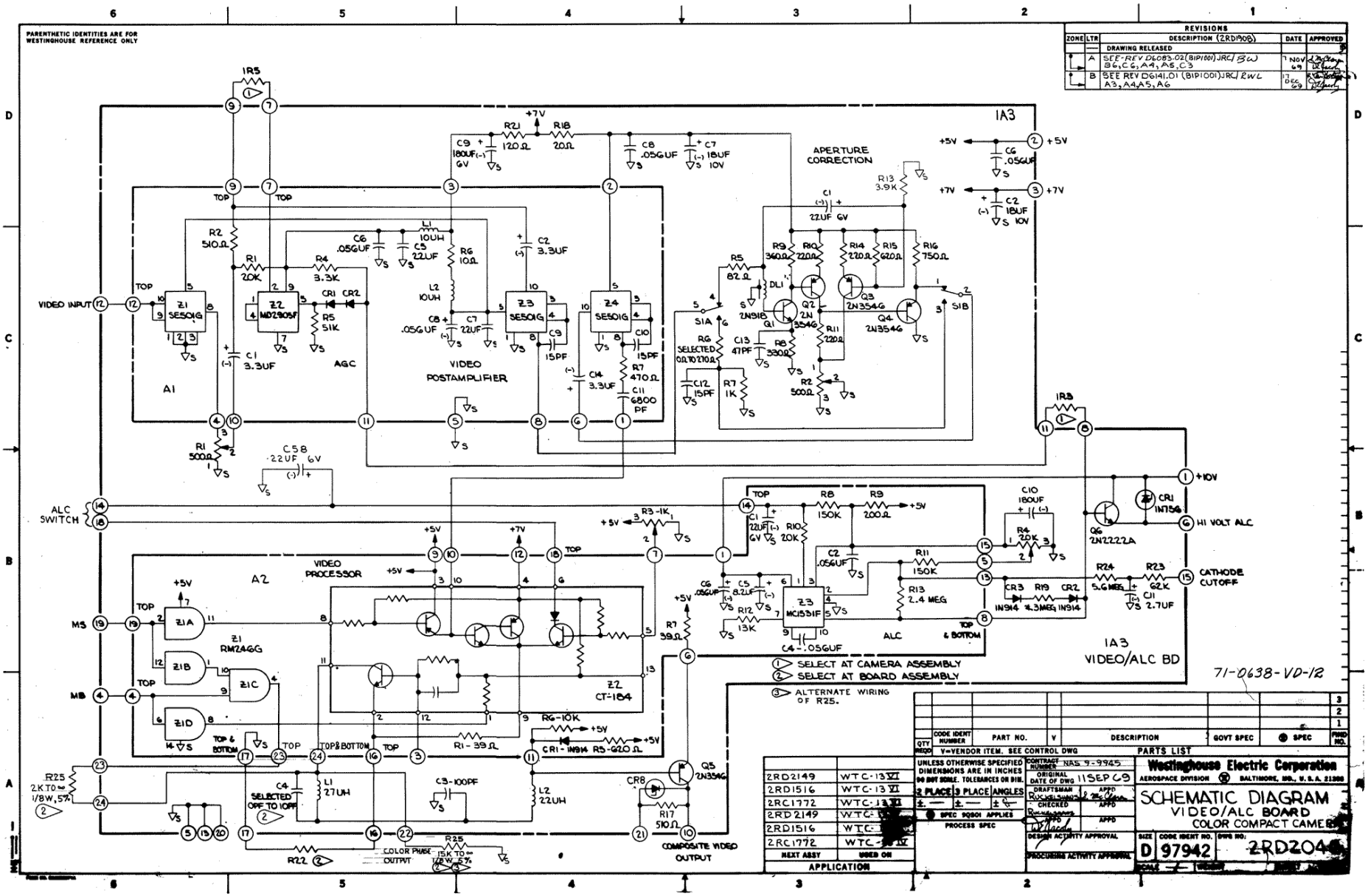

Figure 15. Video/ALC Board Schematic

3.2.2.1.5 ALC/AGC (Refer to Figure 15)

In the mixer circuit pot R3 (connected to 2A2) sets the level at the base of a transistor (in Z2) above which the video must rise to pass through a diode and 1R4 to be integrated by capacitor C1. This integrated signal is used as an input to the differential amplifier Z3 on pin 1. The other side of Z3 (pin 2) is biased by pot R4 which sets the level where the output of Z3 begins to drive. The signal developed at pin 5 of Z3 is the base drive for Q6 which in turn furnishes the input for the high voltage DC to DC converter. The output of Z3 also passes through 1R3 to 2A1 pin 11, CR2, CR1 in pin 5 of Z2. This signal varies the resistance at pin 2 of Z2 to ground so that the video signal appearing at the junction of R2 and 1R5 is a function of this resistance.

3.2.2.2 Synch Generator (Refer to Figures 12 and 16)

The sync generator consists of a master oscillator and dividing circuit to produce EIA sync signals.

The Master Oscillator 1A9 is crystal controlled and oscillates at 787.50kHz. The output of the oscillator is fed to 1A4Z1 pin 17. Twenty-two integrated circuit chips on Z1 divide, pulse shape and mix the oscillator signal to produce; mixed blanking on pin 1, horizontal drive on pin 15, mixed synch on pin 11, and vertical drive on pin 3.

3.2.2.3 Deflection System

3.2.2.3.1 Horizontal Sweep Circuit (Refer to Figure 16)

The horizontal sweep circuit is of the conventional resonant type. The leading edge of the horizontal drive pulse initiates flyback. Flyback time is determined by the yoke inductance in parallel with a resonating capacitor. The flyback diode limits the

oscillator to one-half cycle, and it also controls the yoke current for the first half of the horizontal sweep. The horizontal output transistor controls the yoke current for the second half of the sweep. Flyback is initiated when the output transistor is gated off.

Horizontal drive pulses from pin 15 of Z1, EIA sync generator, on 1A4, are inverted in module A1 through R17, Z2A, and R4, then applied to the horizontal output transistor, base of Q1, through emitter follower Q2B, R3 and shaping network R5 and C4, (C4 is used as a speed-up capacitor). Diode 1A4A1/CR5 provides a discharge path for C4 through Q2A when a synch pulse is present.

The negative going leading edge of the inverted drive pulse gates 1A4/Q1 off breaking the path for the current that had been flowing through the horizontal yoke and S curve correction capacitor C3 on the collector of Q1. The resonant circuit formed by 1A4/C4 and the yoke rings for one-half cycle. Flyback diode CR1 in the collector of Q1 terminates the oscillation by providing a clamp to ground when the back bias from the discharge of C4 is removed. By providing a ground clamp, the flyback diode puts a constant voltage across the yoke causing the yoke current to decrease in a linear manner until the yoke current is zero. The horizontal output transistor Q1, having been previously turned on by the trailing edge of the horizontal drive pulse now begins to conduct yoke current and,by also supplying a constant voltage across the yoke, allows the yoke current to increase in a linear manner until the time that energy dissipated in the output circuit is replenished through 1A4/R3, R2, L1 with potentiometer 1A4/R2 being the horizontal size adjustment. Horizontal centering is provided by potentiometer 1A4/R5 along

with 1A4/R6, R4, L2. 1A4/R9, R10 which parallel the yoke prevent the horizontal sweep signal from getting into the video signal. Chokes 1A4L1 and L2 prevent horizontal frequencies from reaching the regulated supply voltage.

3.2.2.3.2 Vertical Sweep Circuit (Refer to Figure 16)

The vertical sweep circuit is essentially the Miller Integrator variety with a feedback capacitor around an operational amplifier forming an operational integrator. A DC voltage at the input of the circuit is integrated to form a linear sweep waveform. A shorting switch across the feedback capacitor driven by the vertical drive pulse accomplishes the retrace function. Stabilization of the operating point and vertical centering is accomplished by a DC feedback loop located internal to the AC feedback path. Vertical size control is a potentiometer in the AC feedback path.

The DC input voltage to be integrated is formed by 1A4A2/R4, CR1 and applied to the inverting input of 1A4A2/Z1 pin 2 through input resistors 1A4A2/R18 and R5. 1A4A2/R3, Q1A, and R6 form a balanced load for the non-inverting input of Z1. 1A4A2C1 provides lead compensation for Z1. 1A4/C7 is the integrating capacitor with 1A4A2/R2, R1, R10, Q2B forming the discharge switch which is triggered by the vertical drive pulse. 1A4A2/Z2 is a current amplifier included in the forward portion of the loop to provide adequate current drive, with 1A4A2/R9 being a biasing resistor for the current amplifier. A DC feedback path which stabilizes the operating point, is formed by 1A4A2/R7, R8. Vertical centering is provided by 1A4/R1, R11, C9 and is included in the DC feedback loop. The vertical yoke

sections are tied to the current amplifier at pin 4 of Z2. Resistors 1A4/R7, R8 are in series with the yoke with 1A4/R8 being a potentiometer which controls vertical size by varying the amount of feedback voltage. Resistor 1A4/R10 is placed in parallel with the yoke to provide damping for oscillations during vertical retrace. 1A4A2/R17, and C3 form a corner network to reduce any interaction between vertical and horizontal yoke sections by filtering any of the horizontal signal appearing in the vertical yoke.

3.2.2.4 Sweep Fail Protect (Refer to Figure 16)

The purpose of this circuit is to detect the loss of either the horizontal or the vertical sweep, and in their absence, to gate the image tube beam and high voltage off so that its target incurs no damage. The Sweep Fail Protect also gates the image tube off during the appropriate blanking intervals as determined by the mixed blank pulse.

Blanking of the image tube is accomplished by switching cathode potential from ground potential, which is the normal operating potential, to a positive voltage in excess of 20V.

Switching of the cathode bias is accomplished by the output stage consisting of 1A4A1/Q1A, Q1B, Q3A, R8, R10, R11, R13, R15, R16 along with off-board diode 1CR1. With +5 volts applied to the junction of 1A4A1/R8, R10, 1A4A1/Q1A and 1A4A1/Q3A are turned on and 1A4A1/Q1B is turned off. The cathode is then tied to ground through 1A4A1/R16, Q3A. With zero volts at the 1A4A1/R8, R10 junction, 1A4A1/Q1A and 1A4A1/Q3A are turned off and 1A4A1/Q1B is turned on, applying a positive bias to the cathode through 1A4A1/R13, Q1B, which is sufficient to gate the vidicon tube off.

The voltage at the 1A4A1/R8, R10 junction is controlled by the quadruple nand gate 1A4A1/Z2. Horizontal flyback pulses are coupled through 1A4A1/C5 and divider network 1A4A1/R7, R6 to the input, pins 2 and 3, of one of the nand gates. Capacitor 1A4A1/C5 averages the flyback pulses and is charged to a potential sufficient to keep the output, Z2 pin 11, of this nand gate at ground. Diode 1A4A1/CR1 is thereby biased off. In the absence of horizontal flyback pulses, which occurs when the horizontal sweep is lost, the nand gate input is grounded through 1A4A1/R6 with the output level of Z2, pin 11 changing to +5 volts. Capacitor 1A4A1/C9 is then charged up through 1A4A1/R19. This allows a positive bias for a second nand gate input, 1A4A1/Z2, pins 9 and 10, to be developed across 1A4A1/R12.

The vertical sweep voltage is coupled to pins 12 and 13 of the third nand gate section through 1A4A1/CR3, CR4 and off board resistor 1R6. Capacitor 1A4A1/C6 filters the voltage at this nand gate input. The nand gate is triggered by the sweep voltage, and generates a train of positive pulses, at the vertical repetition rate, which are coupled from Z2, pin 1 through 1A4A1/C7, R18 to the base of 1A4A1/Q3B. 1A4A1/Q3B inverts the pulse train, keeping 1A4/C6 discharged and keeping 1A4A1/CR2 biased off. If the vertical sweep is lost, 1A4/C6 charges up through 1A4A1/R9 with a positive bias being developed across 1A4A1/R12 through 1A4A1/CR2. This bias is also applied to pins 9 and 10 of the second nand gate section.

With both sweeps present, 1A4A1/CR1, CR2 are both biased off, thereby clamping the pins 9 and 10 of the third nand gate to ground through 1A4A1/R12. The output at pin 4 of this nand section, which is tied to the

junction of 1A4A1/R8, R10, is +5 volts. This voltage causes the normal operating voltage to be applied to the cathode. If either of the sweeps is lost, a positive bias is developed across 1A4A1/R12 and the output, pin 4, of this nand gate section drops to zero volts, thereby gating the vidicon off.

The mixed blank pulse train is applied to pins 5 and 6 of the fourth nand gate section. The pulse train is inverted and applied to the 1A4A1/R8, R10 junction. Consequently, the image tube is gated off during the blanking periods when the output, pin 8, of the nand gate goes to zero volts. When the output is at +5 volts, the operation of the circuit output stage is unaffected and the tube remains on.

3.2.2.5 Focus Regulation (Refer to Figure 16)

The Focus Regulator circuit serves to regulate the current through the focus coil, 1L2. The regulator circuit is a series regulator whose load consists of the focus coil, 1A4A2/R16, 1A4A2/R15, and 1A4/C5. The sampling element is 1A4A2/R16 in parallel with 1A4A2/R15. The reference element consists of 1A4A2/R11, CR2, R13, R14. Differential amplifier, 1A4A2/Q2, R15, R19, R12, is the comparison and amplifying element, while 1A4/Q2 is the control element.

The regulator circuit is to provide approximately 70 ma of current for the focus coil. 1A4A2/R16 and 1A4A2/R15 samples the current through the focus coil and provides a voltage for one input of the differential amplifier. A zener regulated voltage is applied to the other side of the amplifier. Any voltage difference is amplified and the current drive to the base of 1A4/Q2, the control element is changed so that the focus coil current is changed in a manner as to reduce the

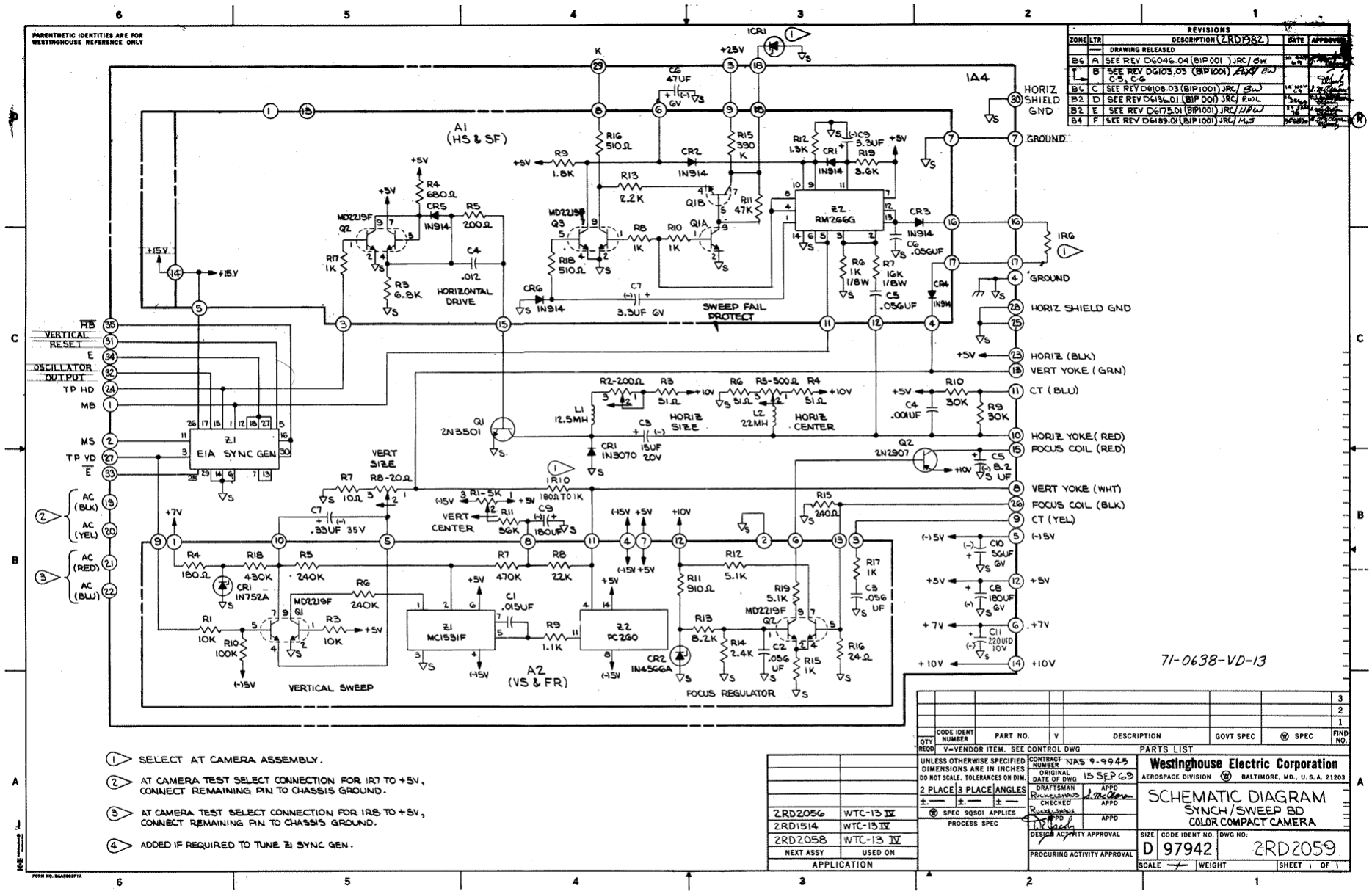

Figure 16. Sync/Sweep Board Schematic

difference voltage to zero thereby maintaining a regulated current in the focus coil.

3.2.2.6 Tube Bias Board Circuit (Refer to Figure 17)

The Tube Bias Board provides adjusted bias voltages for the target, mesh and grids of the vidicon.

The 400V input on 1A2 pin 10 is adjusted by R9 to supply G4 bias potential. G3 is maintained 20V below G4 with the drop of potential across CR1. C3 and C4 are decoupling capacitors. R6 and R7 form a divider for the 325V on pin 1 producing the bias voltage for G2. R2 forms a divider with both R4 and R5 where mesh and target bias voltages are adjusted respectively from the 25V regulated source on pin 2. R1 and R3 divide the -120V source on pin 3, for bias of G1.

3.2.2.7 Transmit/Standby Switch (Refer to Figure 18)

The function of the Transmit/Standby switch is to enable the operator to transmit synchronization without video yet maintain complete picture presentation on the local monitor.

As shown in the block diagram of Figure 12, Transmit/Standby switch is not included in the signal path between the camera and the monitor. The switch, therefore, has no influence on the signals to the monitor.

When the switch is in the transmit position, see Figure 18, S1A and S1B are interconnected to form a signal feed through path from the input, at one (1), to the output, at pin three (3). In the standby position, S1A terminates the input, pin one (1) in R1 and S1B couples the output, pin three (3) to the collector of Q1. Positive mixed sync pulses are applied at pin two (2). These pulses are coupled into the

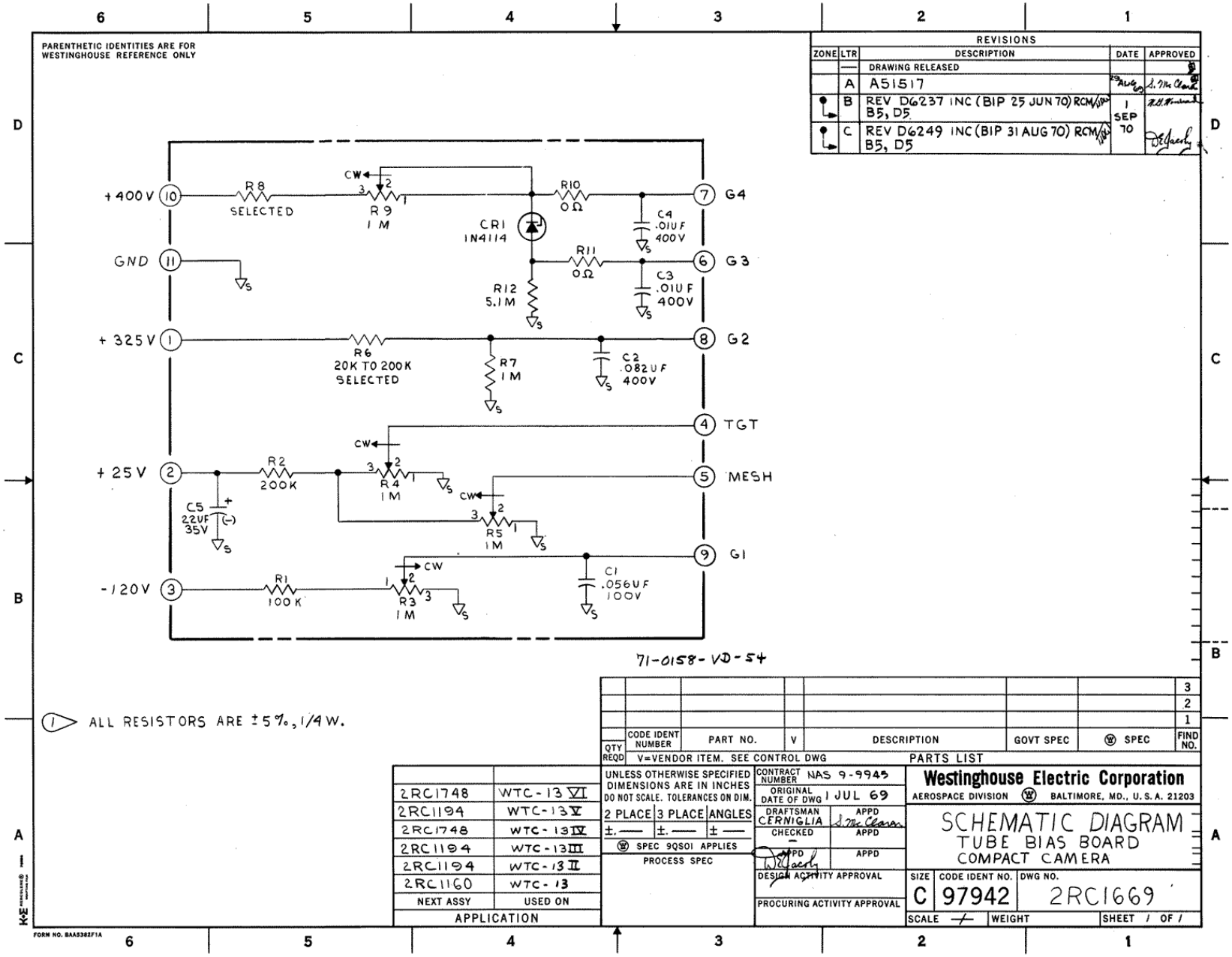

Figure 17. Tube Bias Board Schematic

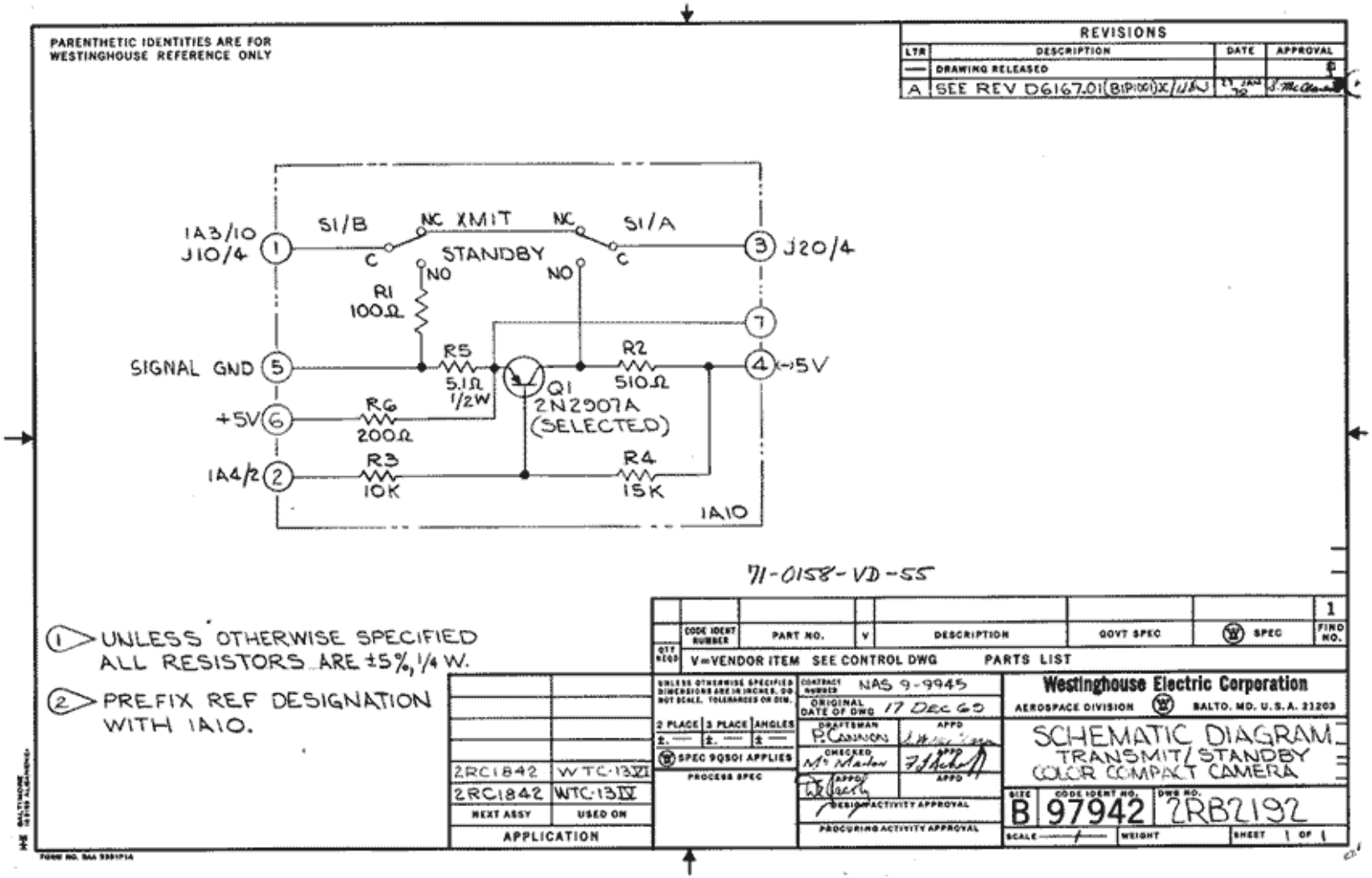

Figure 18. Transmit/Standby Switch Schematic

base of Q1 through R3. The sync pulses are inverted in Q1 and taken to the output through S1B.

3.2.2.8 Motor Circuit Description

3.2.2.8.1 Wheel Pulse Amplifier (Refer to Figure 19)

The wheel pulse amplifier amplifies pulses from a magnetic pickup loop located in the camera housing. This loop has pulses induced into it as a magnet, located on the periphery of the color wheel passes by.

See Figure 19. The output of the loop is applied through R1 to the non-inverting input of operational amplifier Z1. The gain of the amplifier is controlled by the ratio of R3 + R4 to R1. R4 is mode variable to provide a variable gain control. R5 is a 'zero adjust' control that sets the steady slate output of Z1 to zero volts. The output of Z1 is coupled through CR1 and R7 to the base of Q1. CR1 ensures that only positive pulses are coupled into the base of Q1. Q1 with collector resistor R6 amplifies and inverts the positive input pulse. The resulting negative pulse is coupled out through pin 6.

3.2.2.8.2 Motor Logic (See Figure 20)

The motor logic (ML) board derives signals that after amplification, are used to operate the synchronous color wheel drive motor. The ML is a medium scale integrated chip containing eight (8) integrated circuits. Its input, from the synchronizer, is through pins 4, 2, 12, and 10.

Basically, the ML accepts 31.468kHz pulses from the synchronizer, divides them by 525 to produce an output of 59.94Hz. The division is accomplished by a binary chain .

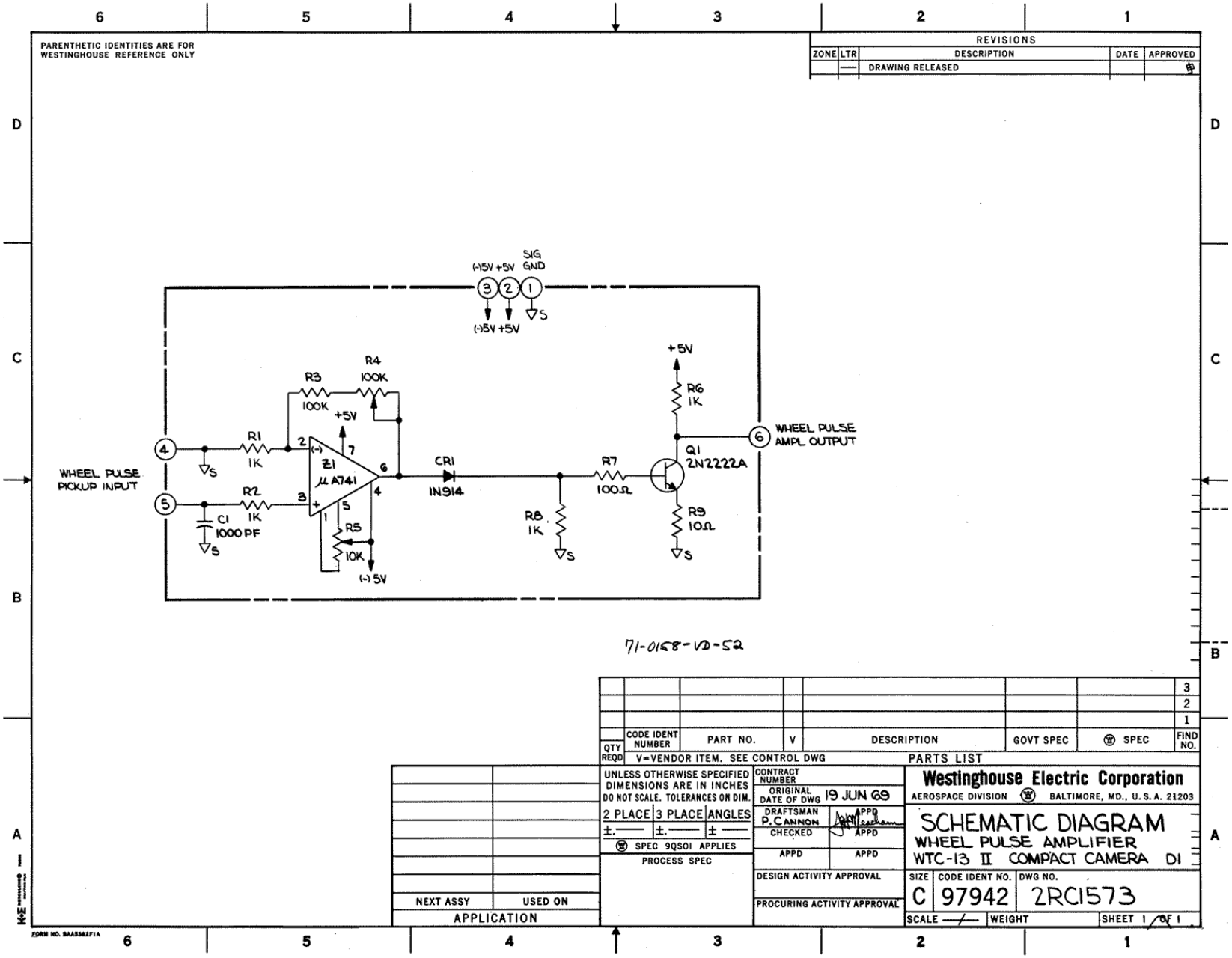

Figure 19. Wheel Pulse Amplifier Schematic

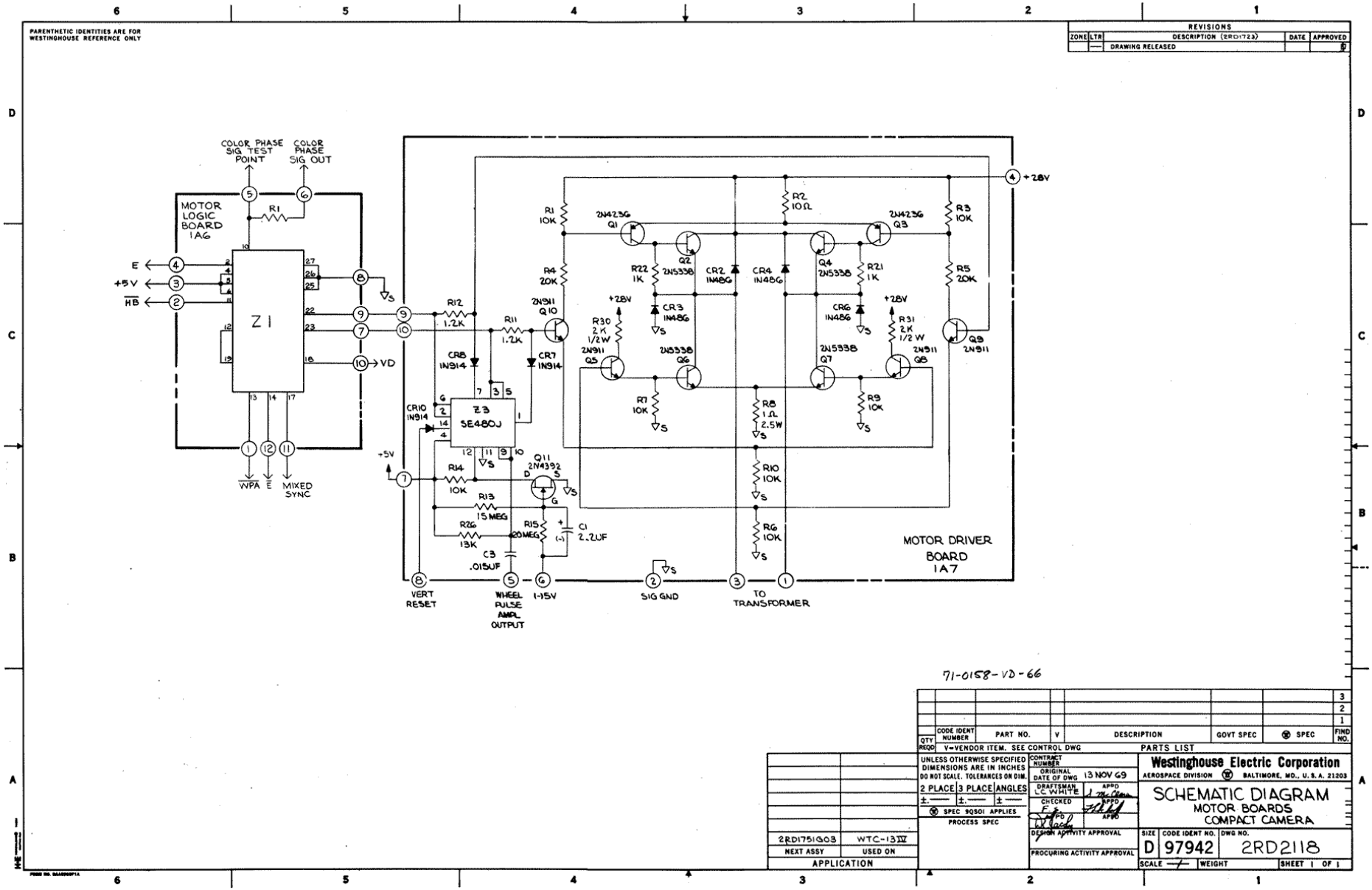

Figure 20. Motor Board Schematic

When operating from a non-sinusoidal power source, the drive motor requires a signal whose duty cycle is less than 100%, see Figure 21. The motor logic chip alters the duty cycle of the 59.94Hz pulses so that they conform to the waveform shown in the figure.

3.2.2.8.3 Filter Circuit

Interposed between the motor logic and the motor drive circuit is the filter circuit. The filter circuit functions to isolate signal ground on the motor logic board from power ground on the motor drive board.

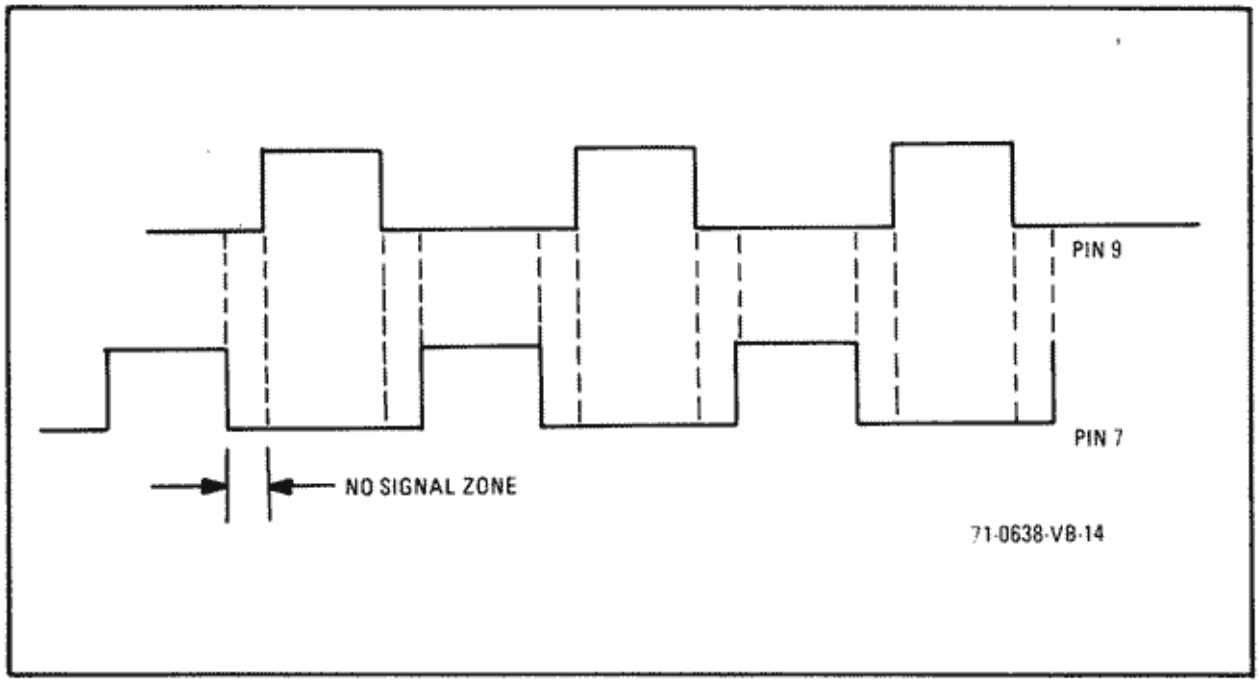

Figure 21. Motor Input Signal Duty Cycle

The motor driver has two inputs. When one is on, the other is off. Referring to the filter circuits in Figure 22, the outputs corresponding to those inputs are pins 7 and 3. Transistors Q1 and Q2 alternately change these outputs. If a transistor is off, its collector output is driving the motor drive circuit on and when it is on it turns the motor drive circuit off.

In Figure 23 it can be seen that the 28 volts power and ground is isolated from the chassis/signal ground and power. The motor drive board is referenced to the 28 volts power and ground, therefore, the driving signals from the ML must somehow be referenced to the 28 volts power and ground, but must also maintain isolation between the two. This is achieved as follows:

The transistor is turned on and off by signals referenced to the chassis signal ground and power. When the transistor is on the junction of R4, R3 is low and the motor driver is off. Also, at this time the 28V power and ground is isolated from the signal power and ground by R4 (51K Ω). When the transistor is off the motor driver is on and the 28 volts power and ground is isolated from the signal ground and power by R4 (51K Ω) plus an open transistor.

CR1 and CR2 are part of a fail safe circuit to prevent damage to the motor drive amplifier in the event that Q1 and Q2 are switched off simultaneously. Note: The motor drive amplifier is turned on during the time that Q1 or Q2 is off, and should Q1 and Q2 be turned off simultaneously, both inputs of the motor drive amplifier would be driven. Referring to Figure 24, it can be seen that CR1 and CR2 are tied to the outputs of a pair of cross coupled nand gates. The inputs to the nand gates are in parallel to the input to the filter boards. As long as one or the

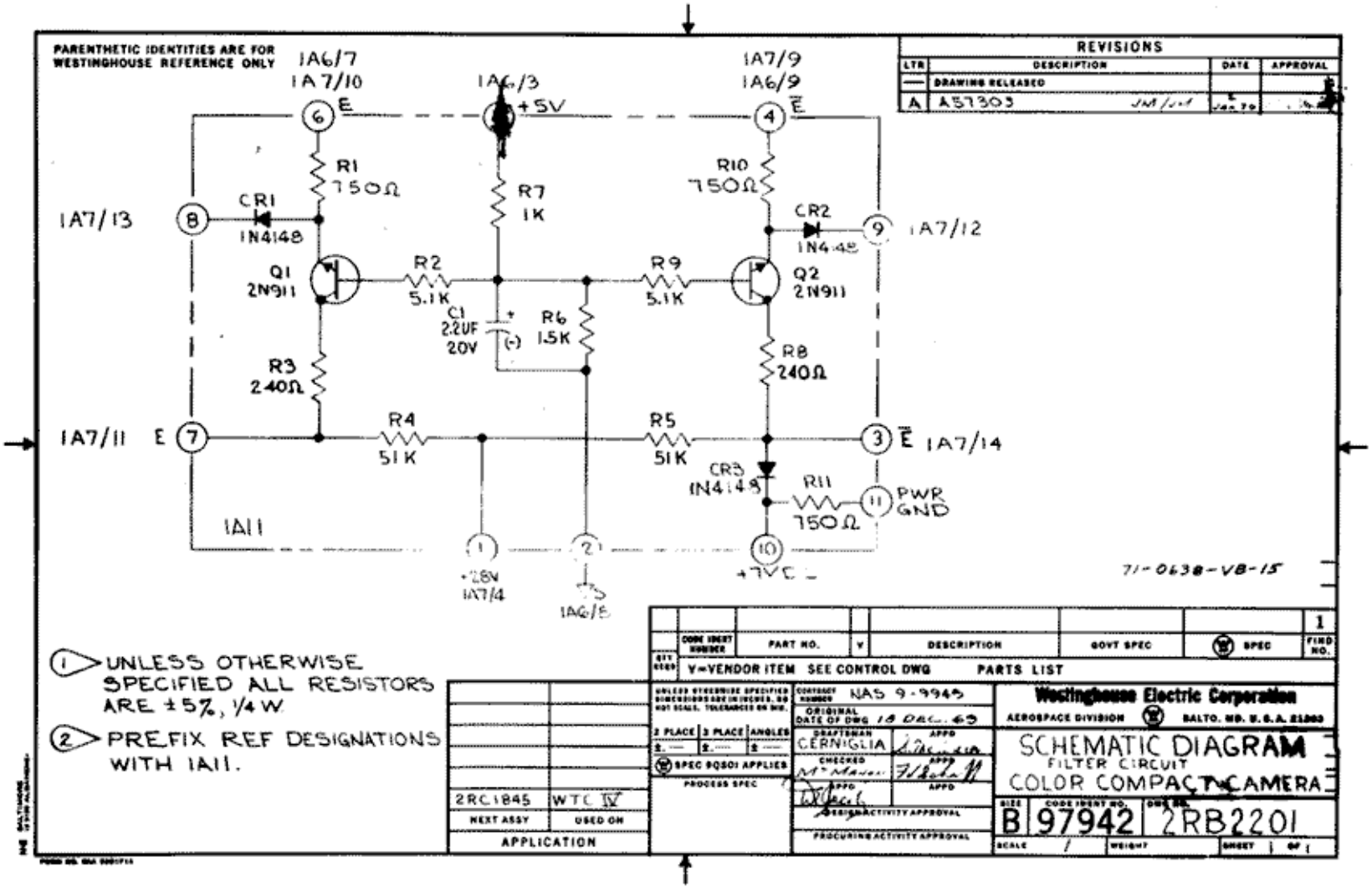

Figure 22. Filter Circuit Schematic

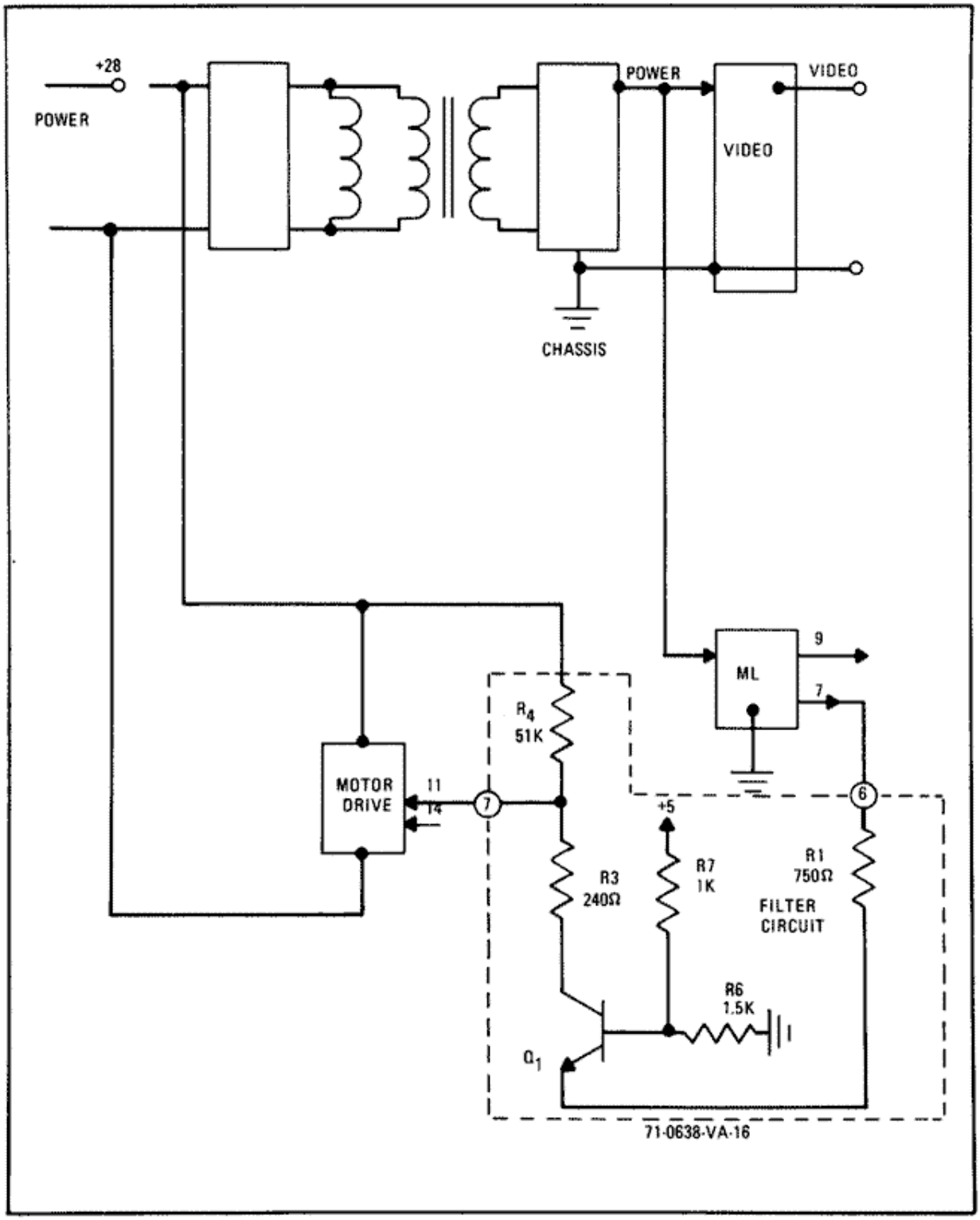

Figure 23. Filter Circuit Block Diagram

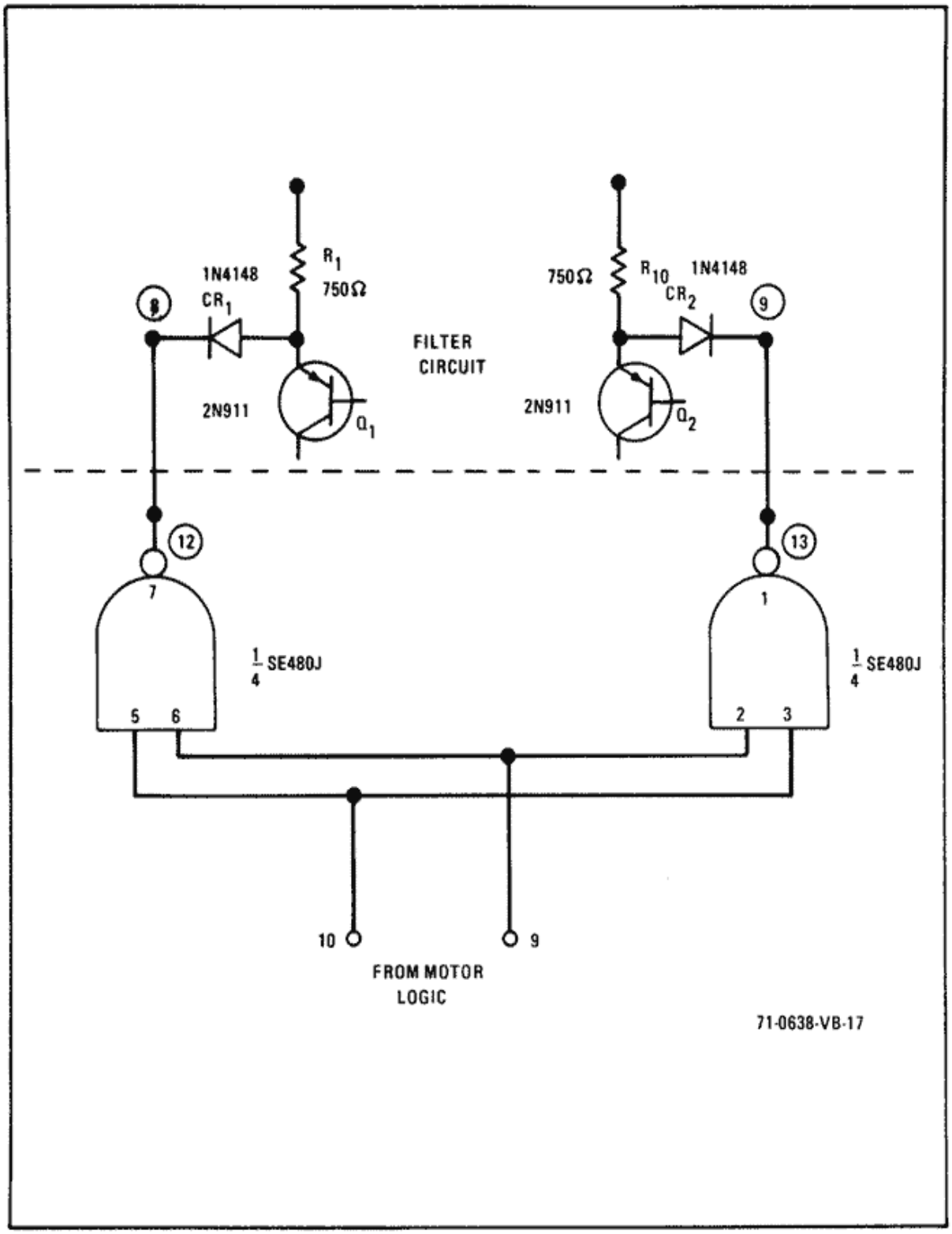

Figure 24. Fail Safe Circuit Schematic

other of the inputs to the nand gate is low, the outputs of the nand gates will be high; the diodes CR1 and CR2 will be back-biased and will have no effect on the operation of the filter. Should both inputs to the nand gates become high, the output would become low, resulting in CR1 and CR2 conducting and removing the input signals from Q1 and Q2.

3.2.2.8.4 Motor Drive Amplifier (Refer to Figure 20)

The motor drive amplifier is a direct coupled double push-pull or H configuration. The operation of the amplifier is as follows:

When the input at the base of Q10 goes high, the transistor is forward-biased. Its emitter voltage goes up and its collector voltage drops. Q1 with its base tied at the junction of R1 and R4, the collector load resistors of Q10, is forward-biased by the collector current of Q10. The resulting flow of collector current in Q1 causes a rise in its collector voltage. This voltage is coupled through emitter follower Q2 to one side of the color wheel drive motor. At the same time, the rise in voltage at the emitter of Q10 is coupled through emitter follower Q8 to the base of Q7. The collector of Q7, to which the other end of the color wheel drive motor is connected, drops as a result of this base drive. This completes one-half of the push-pull operation. The other half, which is identical, is performed by Q9, Q3, Q4, Q5 and Q6. Diodes CR2, CR3, CR4, and CR6 are used to protect the output transistors against motor transients.

3.2.2.8.5 Sync Generator Synchronizer (See Figure 20)

The function of the sync generator synchronizer is to lock the phase of the synchronizer output to that of a position on the color wheel, so that the sweeps,

whose positions are controlled by the synchronizer, will occur at a time when the wheel is in a position to prevent mixing of the colors in the separate fields. The operation of the circuit is as follows:

Q11 functions as a time delay. When power is first applied to the camera, Q11 is biased off, due to the inability of the voltage across C11, Q11 gate voltages, to change immediately. The drain of Q11 is tied at one of the inputs of a two (2) input nand gate on Z3, pin 12 of Z3. The other nand input, pin 13, is tied to the output of another 2 input nand in Z3, pin 8 on Z3. The two inputs of the second nand gate, pins 9 and 10, are tied together and coupled to the output of the wheel pulse amplifier through C3. With Q11 biased off input 12 is high, and each time an output from the wheel pulse amplifier appears at the input of the second nand gate (inputs 9 and 10),it is coupled through its output at 8 into input 13 and out 14 into the synchronizer reset line. The time constant of C1, R13 and R15 is such that Q11 remains off for about ten seconds. After this time it conducts and clamps pin 12 to ground. After this no additional synchronizing pulses from the wheel pulse amplifier pass through. However, only a few are required to phase-lock the synchronizer, and leaving the gate open permanently may cause extraneous pulses to reset the synchronizer causing jitter in the video.

3.2.2.9 Power Supply

3.2.2.9.1 Low Voltage Power Supply (Refer to Figure 12)

The Low Voltage Power Supply consists of six modules,seven capacitors and three inductors. These components are contained on assembly 1A5 which is mounted on a subchassis in the rear of the camera. Output voltages produced are ± 5V, +7V, +25V, -120V,

+325V, +400V, and 6.3V for the tube filament. The input power, shown in Figure 12, is brought in through pins 7 and 2 of P20 on the camera. As shown, this is supplied from the spacecraft console. The input may range between 24 to 32 volts. The input stage A1, on 1A5, is a Pulse Width Regulator producing a regulated line voltage into Inverter Module A2. The output of the main inverter A2 supplies various AC levels to inverter modules A3 through A6. The resulting DC outputs from these modules supply the camera circuits. The capacitors and inductors are used for filtering.

3.2.2.9.2 High Voltage Power Supply

The High Voltage Power Supply is a self-contained module mounted in the camera unit. The low voltage DC input, controlling signal, is provided by the ALC circuits on 1A3. An output of one kilovolt is produced with each one volt input. The output level may vary between 1.5 to 8 kilovolts. The high voltage output is used in the image section of the tube to control the sensitivity.

4.0 MONITOR

4.1 General Description

The monitor, shown in Figure 25, is used to aim, focus, zoom and observe the television camera performance. It consists of 3 circuit boards, a CRT and a high voltage power supply module. The circuit boards contain the horizontal sweep, video amplifier, vertical sweep, and low voltage power supply. The CRT is magnetically deflected and electrostatically focused. The high voltage power supply provides the anode and focus voltages for the CRT. The low voltage power supply is a DC-to-DC converter providing the remaining required voltages.

4.2 Circuit Description

4.2.1 Video Preamplifier

The input stage of the monitor is Z1, a differential video amplifier. This amplifier functions to isolate the power ground of the camera from that of the monitor. The gain of the amplifier is set to unity by resistor ratios R1/R2, R3/R4 and R5/R6. The high side of the video input signal is coupled into one of the differential amplifier's inputs through C1 and R1; the video return is coupled into the other input through C2 and R2. The output of the amplifier contains the difference of its inputs, which is the video signal. Ground signals, which cause both inputs to rise and fall simultaneously, are effectively summed to zero at the output. The output of Z1 is coupled into the sync separator through C1 and into the video amplifier through R3.

4.2.2 Sync Separator

The sync separator consists of Q1 and Q2 with their associated circuitry. The video signal, with negative going sync pulses, is coupled through R1 and C2 to the base of Q1. Q1 is a PNP transistor with little forward

bias. As a result of this, only the negative portion of the input is amplified and appears out across R4. The output across R4 is coupled through C3 and R5 to the base of Q2. Q6 is a NPN transistor with low forward bias. This results in only the uppermost part of the input signal, the sync pulses, being amplified and appearing across R8.

4.2.3 Sweep Circuits

4.2.3.1 Vertical Sweep

The vertical sweep oscillator is a blocking type composed of Q3 and T1, Q3 providing the gain required for oscillation and T1 providing positive feedback. The frequency of oscillation is determined by C10, R16 and R1. R1 is variable and is the vertical hold control. C9 and R15 generate the sweep waveform. During the time that Q1 is off, C9 charges through R15. The sawtooth waveform across C9 is coupled through R14 and R18 to the inverting input of Z1, an operational amplifier. When Q3 conducts, the retrace time of a field, C9 is discharged. The cycle is then repeated. The turn on of Q3 is timed by the trigger pulses coming in through CR1. These trigger pulses are formed from the vertical sync pulses by R10, C5, R11, and C7.

The vertical output amplifier consists of the feedback pair Z1 and Q4. As previously noted, Z1 is an operational amplifier, Q4 is complementary amplifier, combining a PNP and an NPN transistor in a single package. DC feedback to the input is through R24. AC feedback is through R38, R19, and C11. The degree of linearity is controlled by varying the amount of AC feedback. Variable resistor R38 does this. The gain of the amplifier, which determines vertical size, is controlled by series variable resistor R18. Vertical retrace blanking is secured by coupling the high voltage pulse, generated at the output of the amplifier during the retracing interval, through

C14 and R26 to the base of Q2. The pulse is squared up in Q2 and coupled into the grid of the CRT through C6. CR3, in the base of Q2, clamps the negative portion of the input pulse to ground.

4.2.3.2 Horizontal Sweep

Horizontal synchronizing pulses appearing at the output of sync separator Q2 are coupled into the horizontal AFC loop through R9 and C4. The horizontal AFC is a part of the horizontal sweep circuit, and the two circuits function to generate the sweep currents necessary to drive the electron beam across the face of the CRT horizontally and to keep the sweep currents locked in with the horizontal sychronizing pulses. The AFC/horizontal sweep consists of CR4A, CR4, horizontal phase discriminator, T1 and Q4 blocking oscillator, and Q5, Q6 driver and horizontal output respectively. CR8 is the horizontal damping diode. The blocking oscillator, T1, Q4 is voltage-controlled. The control voltage is developed across the divider composed of R2, CR5, R28, and R27 and coupled to the base of the oscillator transistor, Q4, through R26, R25, R23, R22 and a winding on R1. R25 and R26 are the phase discriminator load resistors and the sum of the voltages developed across these resistors will add to or subtract from the voltage across the divider depending on whether the frequency of the oscillator is higher or lower than the frequency of the sync pulses. When Q4 is conducting an input is supplied to the base of Q5 through a secondary winding on T1 and R18. Q5 is turned on and this in turn saturates Q6 through transformer T2. The saturation of Q6 provides a path for current to flow through horizontal deflection coil L1B. The path is through L1B, C18 and Q6. When Q4 stops conducting, at the end of a horizontal line, Q6 is turned off. With the current path blocked through Q6, L1B resonates with C21. The first half-cycle of the

resonant frequency returns the beam to the left side of the CRT. The subsequent positive attenuation is damped by CR8. The DC resulting from the damping action of CR8 provides the sweep current through L1B during the initial portion of the sweep. Q4 begins conducting again and the cycle is repeated.

There are two (2) inputs to the phase discriminator. One (1) is from the sync separator, the sync signals, and is applied at the junction of CR4A, CR4G, R25, R26 and C9. The other is the output of the horizontal amplifier Q6, and coupled through C13 to the junction of R25, CR4A, C9 and R23 after having been integrated by C14. Both of these inputs cause CR4A and CR4B to conduct. CR4A sees the sum of the sync pulses and a slice of the integrated waveform. CR4B sees the sum of the sync pulses and also a slice of the integrated waveform. If the phase of the integrated waveform is such that the sum which both diodes see is the same, the currents through R25 and R26 will be equal and opposite and no additional DC will be added to the oscillator control voltage. However, should the oscillator frequency shift such that the resulting integrated waveform adds more to the sum of one of the diodes than to the other, the voltage across R25 will no longer equal that across R26. This difference will add to the control voltage of the oscillator and cause a frequency change in such a direction as to reduce the difference to zero.

Horizontal retrace blanking is obtained by coupling the output of Q6, horizontal output driver, through R14 and C19 to the control grid of the CRT. CR2 is used to clamp the positive portion of the blanking pulse to ground.

4.2.4 Video Post Amplifier

Video signals from A4, the video preamplifier, are coupled into base of Q3, the first stage of the post, amplifier through R3. The signal is inverted and amplified in Q3 coupled through C7 to the bases of the complementary output stage Q7 and Q8. Video gain is controlled through variable resistor R3. This resistor controls emitter degeneration of Q3. CR1 is the DC restorer. It clamps all positive portions of the video to the level set by brightness control. The brightness control sets the DC output level of the complementary output stage. The DC component along with the video signal is applied to the filament of the CRT.

4.2.5 Power Supplies

4.2.5.1 High Voltage

The horizontal flyback pulse that returns the beam to the left side of the CR1 is also used to generate some of the DC operating voltages required by the monitor. These include acceleration anode voltage, G2 voltage, G4 voltage (focus), filament voltage for the CRT, and voltage for the video amplifier.

The horizontal sweep voltage is coupled into tapped primary of TILA6600. The secondary of this transformer is also tapped. The voltage from one tap is applied to CR1. This voltage is rectified by CR1, filtered by R13 and C5 and is used as operating voltage for the video amplifier and the horizontal blanking amplifier. CR2 is at another tap. This voltage after being rectified by CR2 is filtered by C1 and R1. A variable tap on R1 serves as the focus control (G4 voltage). The voltage at R1 is coupled through dropping resistor R4 to the G2. C7 is G2 filter capacitor. The highest voltage tap on the secondary of TILA6600 is connected to five (5) stage

voltage multiplier consisting of CR3, C2, CR4, C5, CR5, C3, CR6, C6, CR7 and C4. The voltage multiplier is a series adding type. When CR3 conducts C2 is charged up to the peak transformer voltages. When CR4 conducts, C5 is charged. The charge on C5 is coupled through to C3 by CR5. C6 is charged by CR6 and the charge on C6 is coupled through to C4 by CR7. The DC output is the sum of the voltages across C4, C3 and C2. This voltage is applied to the CRT anode.

4.2.5.2 Low Voltage Power Supply

A single low voltage level is required by the monitor and this is secured through a switching regulator in series with the input DC power. The regulator consists of Z2 (and its associated operational components), Q5, CR6, L2 and C20. Z2 is the controller, Q5 the switching transistor, CR6 catching diode, L2, C20 ringing inductor and filter capacitor, respectively. The switching regulator is a very efficient regulator that operates on the principle of varying the duty cycle of the 'passing' transistor to compensate for difference between input voltage and output voltage. Z2 compares the output voltage of the supply against an interval reference voltage and generates a signal whose duty cycle depends on the difference between them. The signal is supplied to Q5 and switches it on and off in accordance with the duty cycle. L2 supplies current to the load through CR6 during the interval that Q3 is turned off. C20 is used in conjunction with L2 to minimize output ripple.

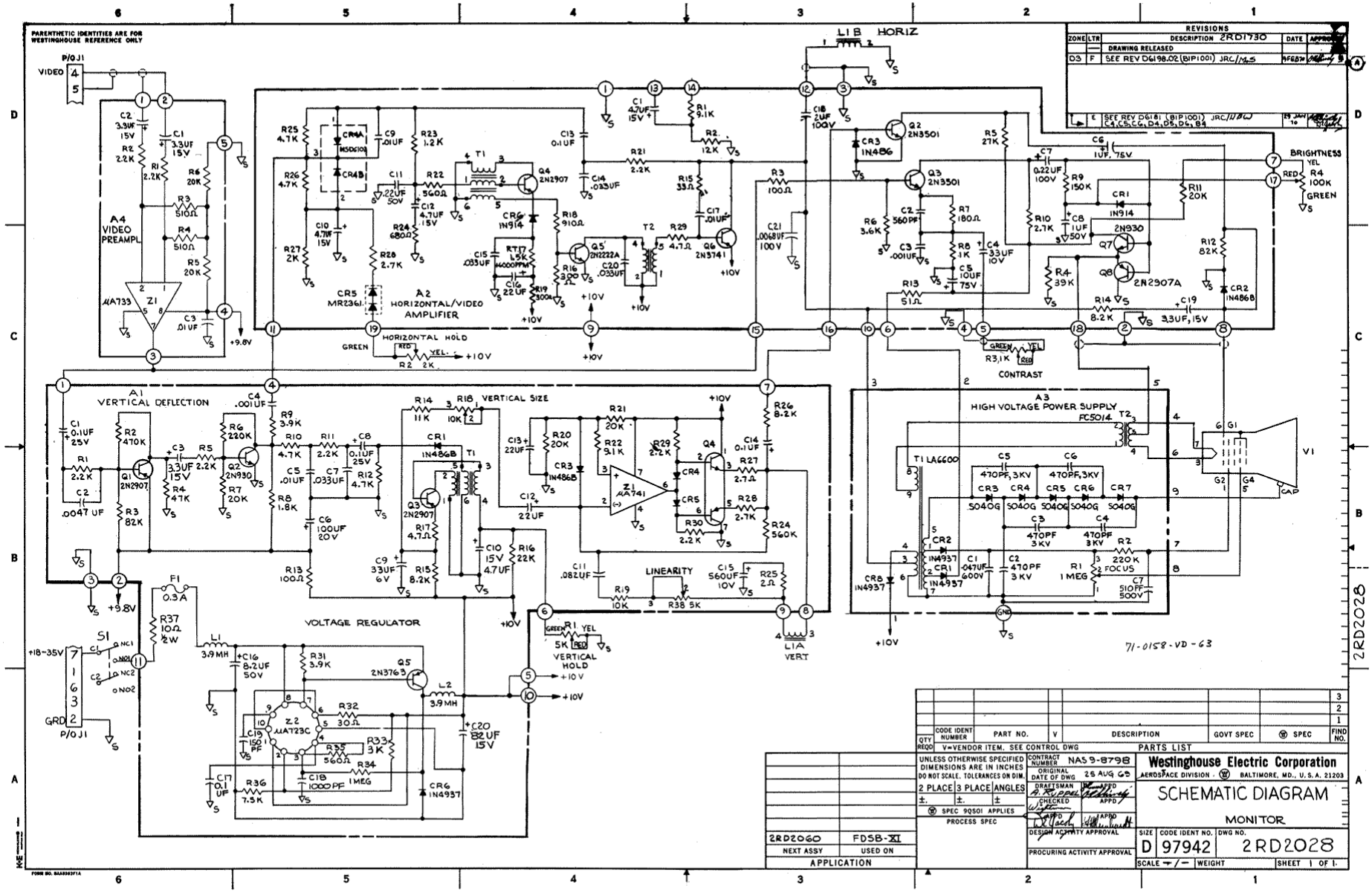

Figure 25. Monitor Schematic

5.0 GROUND SUPPORT EQUIPMENT

5.1 General

The use of a field sequential color camera in the Apollo spacecraft has the desirable features of enabling the design and fabrication of a reliable, compact, low-powered unit that is ideally suited for the limited space and power environment of the space vehicle. However, the simplicity of the space camera necessitates the development of rather sophisticated ground support equipment.

The signals transmitted from the Apollo color camera are not compatible with the NTSC standard. The former being color field sequential and the latter simultaneous color field presentation. Also, due to the relative motion between the spacecraft and the earth receiving station, a doppler shift frequency component is added to the transmitted signal. This added frequency component can cause faulty synchronization and a loss of color fidelity. It is the function of the ground support equipment to convert the field sequential signals of the Apollo camera to the NTSC standard, and to make correction for the doppler frequency shift.

5.2 Doppler Shift Correction - See Figure 26

Doppler shift correction is made through the use of two (2) tape recorders: one records, the other plays back.

Signals from the spacecraft are recorded on the recording tape recorder and the timing of the recorded synchronizing pulses is a function of the relative direction of motion of the spacecraft with respect to earth. When the spacecraft is receding, the timing (space interval between each pulse) of the sync pulses is longer. When the spacecraft is approaching, the timing is shorter. The tape from the recording machine is coupled over to the playback machine. However, the tape is slackened so that the one machine may turn faster or slower than the other without

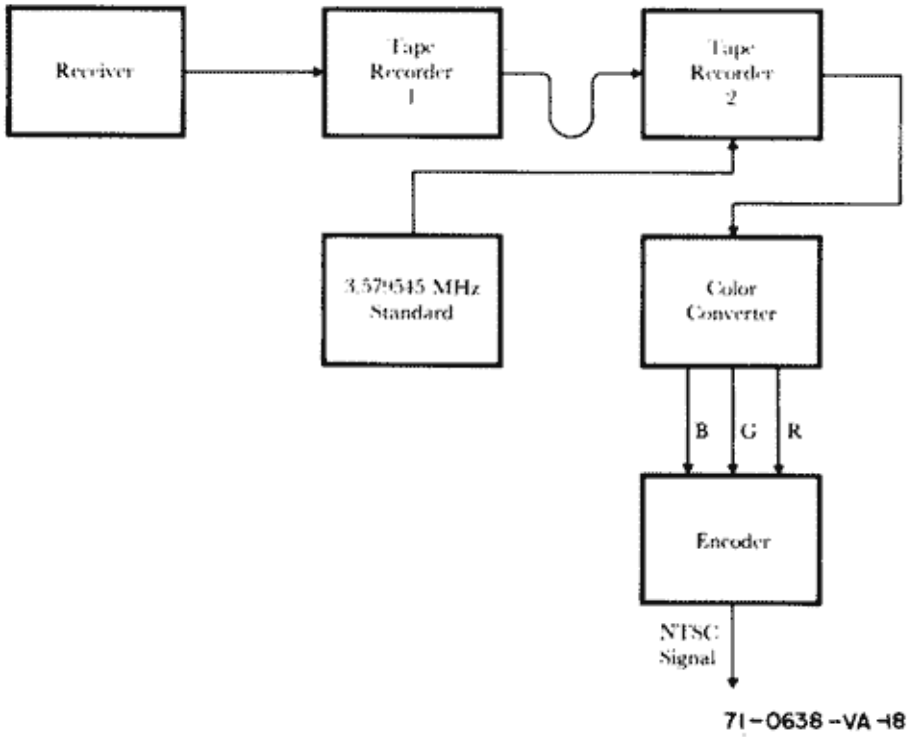

Figure 26. Ground Equipment

it being broken. The playback recorder is driven by a servo that is referenced to the color subcarrier frequency of 3.58MHz. This servo compares the frequency of the subcarrier with that of the horizontal synchronizing pulses on the tape coming in from the recording tape recorder and varies the speed of the playback tape recorder so that the timing of the output sync pulses are in accordance with the NTSC standard. The output from the playback recorder is coupled into the scan converter.

5.3 Scan Converter - See Figure 27

The scan converter converts the field sequential color into the NTSC standard.

Attention is first directed to the fact that the NTSC color standard, just as in black and white TV, uses two-to-one horizontal interlace. Each frame (picture) contains two fields, with each field containing 262-1/2 horizontal lines. One field is called odd and the other even. An odd field can be converted to an even field or vise versa, by delaying it for 1/2 line. This will become clear when it is recalled that field number one (even) begins at the top left side of the picture and ends 1/2 line from the bottom. Field number two (odd) begins 1/2 line from top left and ends at bottom right. Therefore, a delay of 1/2 line can convert one field to the other.

The scan converter contains a magnetic disc rotating at 3600 RPM or 60 RPS. The disc contains six (6) tracks. The video signals enter the disc at a field sequential rate and are read out three fields in parallel. Referring to the figure, at any one revolution of the disc, 1/60 sec., one of the six tracks is being erased, three are reading out signal, one is blank, and one is writing.

	DISC RECORDER CHANNELS						
	1	2	3	4	5	6	
	E_v	O_d	E_v	O_d	E_v	O_d	FIELD DESIGNATION
	R_e	G_r	B_u	R_e	G_r	B_u	FIELD COLOR
DISC ROTATIONS 1	E	R	$\boxed{R}$	R	O	W	
2	W	E	R	$\boxed{R}$	R	O	
3	O	W	E	R	$\boxed{R}$	R	
4	R	O	W	E	R	$\boxed{R}$	
5	$\boxed{R}$	R	O	W	E	R	
6	R	$\boxed{R}$	R	O	W	E	
7	E	R	$\boxed{R}$	R	O	W	

E_v = EVEN FIELD
O_d = ODD FIELD
E = ERASE
R = READ
O = OPEN
W = WRITE
$\square$ = CONVERTED FIELD
R_e = RED
G_r = GREEN
B_u = BLUE

71-0638-VA-19

Figure 27. Scan Converter

In order to have a NTSC color frame from the sequential field inputs, there must be three (3) even color fields and three (3) odd color fields. The input fields to the disc from the tape machine are odd, even, odd, even, etc. Any three fields presented at the output of the disc, as a result of this will contain a wrong field, either two odds and one even or two evens and one odd. To correct this, the wrong field is converted by being delayed 1/2 line. Where there would be two odds and one even field, the even field is converted to odd, and where there would be two evens and one odd field, the odd field is converted to an even field. This process continues as the wheel continues to rotate.

The output of the color converter is fed into an encoder. The encoder completes the transformation to the NTSC standard. This includes adding the color burst color reference signal, amplitude modulating the chromonance signal onto the color subcarrier and suppressing the subcarrier, and setting the primary color amplitude to the standard values.