ORIGINAL PAGE IS
OF POOR QUALITY

The remaining three glass samples are irregular, coarse, agglutinates with numerous small lithic inclusions. The fragmental rocks have been divided into five main groups on the basis of proportions of light and dark clasts and matrix color. All five groups are varieties of impact-generated breccias; none appear to be of volcanic origin. The majority of the rocks are polymictic breccias, but a substantial minority are monomictic. Two types of clasts are clearly dominant: one type is dark, aphanitic to finely crystalline metaclastic rocks; the other is white, partly crushed to powdered feldspathic rocks. Less common clast types include light-gray or white rocks with granoblastic textures, a variety of gabbroic to anorthositic rocks with medium to coarse grain size, and rare feldspar-poor basaltic rocks. Matrices of the light- and medium-gray-matrix breccias are, for the most part, friable and not visibly altered by subsequent thermal events, whereas those of dark-matrix breccias are coherent and annealed or fused.

The rock distribution suggests that the section underlying the Cayley Plains is stratified, with an upper unit of medium-gray breccia and lower units composed mainly of light- and dark-matrix breccias. The extent of the supposed upper unit is not known but presumably extends at least between stations 1 and 6; considering the relative scarcity of the medium-gray breccias, the unit is probably not more than a few meters thick. Evidence derived from the photographs, crew descriptions, and samples collected at station 11 suggests that light-matrix breccias overlie dark-matrix breccias, whereas the color of ejecta on the rims of South Ray and Baby Ray Craters suggests that dark-matrix breccias overlie light-matrix breccias near those craters. Such a stratographic sequence in the South Ray area is consistent with the dominance of dark-matrix breccias described and photographed in South Ray ejecta between the landing site and station 8.

The Cayley Formation at the Apollo 16 site is a thick (at least 200 and possibly more than 300 meters), crudely stratified debris unit, the components of which are derived from plutonic anorthosites and feldspathic gabbros and from metamorphic rocks of similar composition. The formation has an elemental composition similar to that observed over large regions of the lunar highlands by the orbital X-ray experiments of the Apollo 15 and 16 missions. The observed textures and structures of the breccias resemble those of impact breccias. The textures and structures of the breccias do not resemble those of volcanic rocks nor do the plutonic or metamorphic source rocks of the breccias have the textures or compositions of terrestrial or most of the previously sampled lunar volcanic rocks.

The physical and mechanical properties of the soil at the Apollo 16 landing site are generally similar to those of the soils encountered at the previous Apollo sites. Data obtained using the self-recording penetrometer have provided a basis for quantitative study of stratigraphy, density, and strength characteristics. These results and crew observations, photographs, and soil samples (particularly the core-tube samples) have been used to develop the following preliminary conclusions.

a. Soil cover appeared to blanket all areas visited or observed at the Descartes landing area.

b. Soil properties are variable on regional and local (1 meter) scales.

c. Visibility degradation by blowing dust was less during the Apollo 16 lunar module descent than during previous missions, probably because of a faster descent rate and a higher sun angle rather than a difference in soil conditions.

d. The grain-size distributions of soil samples from the Descartes area are comparable to those from other areas of the moon, although distributions for most Descartes samples fall toward the coarser edge of a composite distribution.

e. The drive-tube samples indicate that soil density increases with depth, but the overall range of densities (1.40 to 1.80 grams per cubic centimeter) is slightly less than the range (1.36 to 2.15 grams per cubic centimeter) found for Apollo 15 core-tube samples.

f. South Ray crater material appears to cover the station 4 area to depths of 20 to 50 centimeters. Descartes Formation material may have been found at greater depths.

g. Density distributions with depth for the Apollo 16 deep-drill-stem samples are distinctly different from those of Apollo 15 and suggest that the modes of soil deposition at the two sites may have been different.

3.2.6 Geology of the Apollo 17 Landing Site

The Apollo 17 landing site was named Taurus-Littrow because of its proximity to the Montes Taurus (Taurus Mountains) and the crater Littrow. The lunar module landed on the flat floor of a deep narrow valley bounded by steep-sided mountain blocks that form part of the mountainous eastern rim of Mare Serenitatis (Sea of Serenity, referred to geologically as the Serenitatis Basin). The blocks are thought to be bounded by high-angle faults that are largely radial and concentric to the Serenitatis Basin. Hence, the valley itself is interpreted as a graben formed at the time of the Serenitatis impact. Figure 3-11 shows the landing site and the major geological features* that were examined by the Apollo 17 crew. During their stay on the lunar surface, the Apollo 17 crew traversed a total of about 34 kilometers, collected over 110 kilograms of rocks and soil, and took more than 2200 photographs. Their traverses span the full width of the Taurus-Littrow valley, as shown in figure 3-12.* Much of the following discussion was exerpted from reference 3-12.

The highlands surrounding the valley can be divided on the basis of morphology into (1) high smooth massifs; (2) smaller, closely spaced domical hills referred to as the Sculptured Hills; and (3) materials of low hills adjacent to the massifs and the Sculptured Hills. Boulders that had rolled down the slopes of the massifs north and south of the valley provided samples of that area. These boulders are composed of complex breccias that are generally similar to those returned from the Apollo 15 and 16 missions.

Materials of the valley fill were sampled at many stations. Ejecta around many craters on the valley floor consists of 3.8-billion-year-old basalts, showing that the graben was partly filled by lava flows. A relatively thick layer (approximately 15 meters) of unconsolidated material overlies the subfloor basalt; this debris consists largely of finely comminuted material typical of the lunar regolith. For the most part, this is impact-generated regolith similar to that developed on mare basalts elsewhere on the moon. The central cluster ejecta, the light mantle, and the ejecta of Shorty and Van Serg Craters are discrete deposits recognized within the regolith.

The young pyroclastic "dark mantle" anticipated before the mission was not recognized in the traverse area as a discrete surface layer. However, soil consisting of orange glass spheres was collected. This soil most likely originated from volcanic fire fountains that accompanied lava extrusion to form irregularly shaped layers that are now buried. Strong photogeologic evidence for the existence of a dark mantle in parts of the highlands still exists. Albedo measurements show that abnormal surface darkening, consistent with the concept of the introduction of exotic dark material increases to the east and south in the Taurus-Littrow area. The dark mantle may have accumulated shortly after the extrusion of the subfloor basalt.

The "light mantle" is an unusual deposit of high-albedo material with finger-like projections that extend 6 kilometers across dark plains from the South Massif. Rock fragments collected from the light mantle are similar in lithology to the breccias of the South Massif. This similarity supports the hypothesis that the light mantle is an avalanche deposit formed from loose materials on the face of the South Massif. A cluster of secondary craters on the top of the South Massif may record the impact event that initiated the avalanche. Size-frequency distribution and morphologies of craters on the light mantle suggest that its age is comparable to that of Tycho Crater, on the order of 100 million years.

Fine-grained soil, darker than the underlying unconsolidated debris, was recognized at the surface at Shorty Crater, at Van Serg Crater, on the light mantle, and on the massif talus. The soil is thin (e.g., 0.5 centimeter at Shorty, and about 7 centimeters on the flank of Van Serg) and probably represents the regolith that has formed on these young ejecta or talus surfaces. Relatively young structural deformation in the landing area is recorded by the Lee-Linclon Scarp and by small fresh grabens that trend northwest across the light mantle. The sharp knickpoint at the base of the massifs may indicate that some fairly recent uplift of the massifs has kept the talus slopes active.

*The designations of the features shown in figures 3-11 and 3-12 are informal.

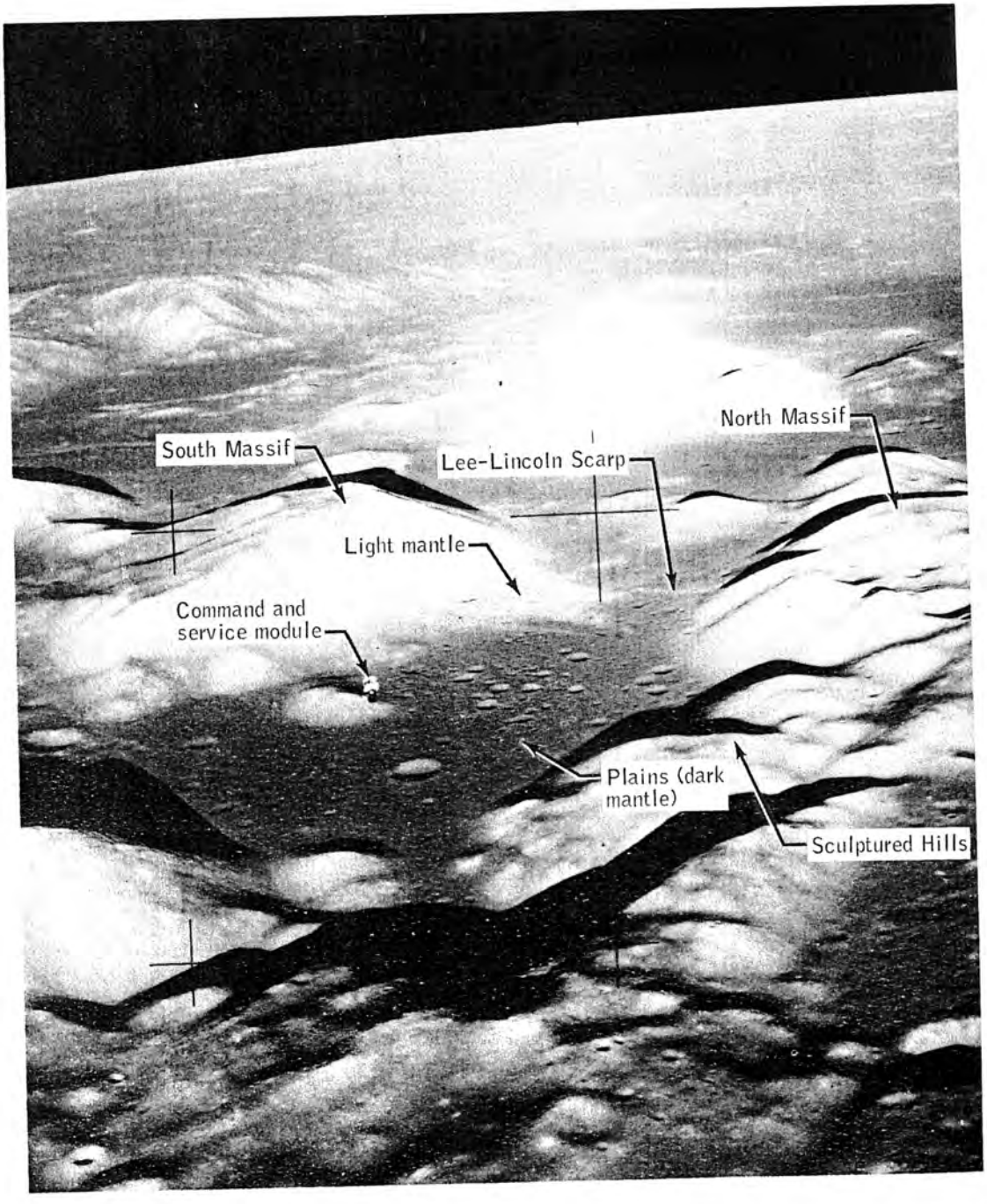

Figure 3-11.- Taurus-Littrow landing area.

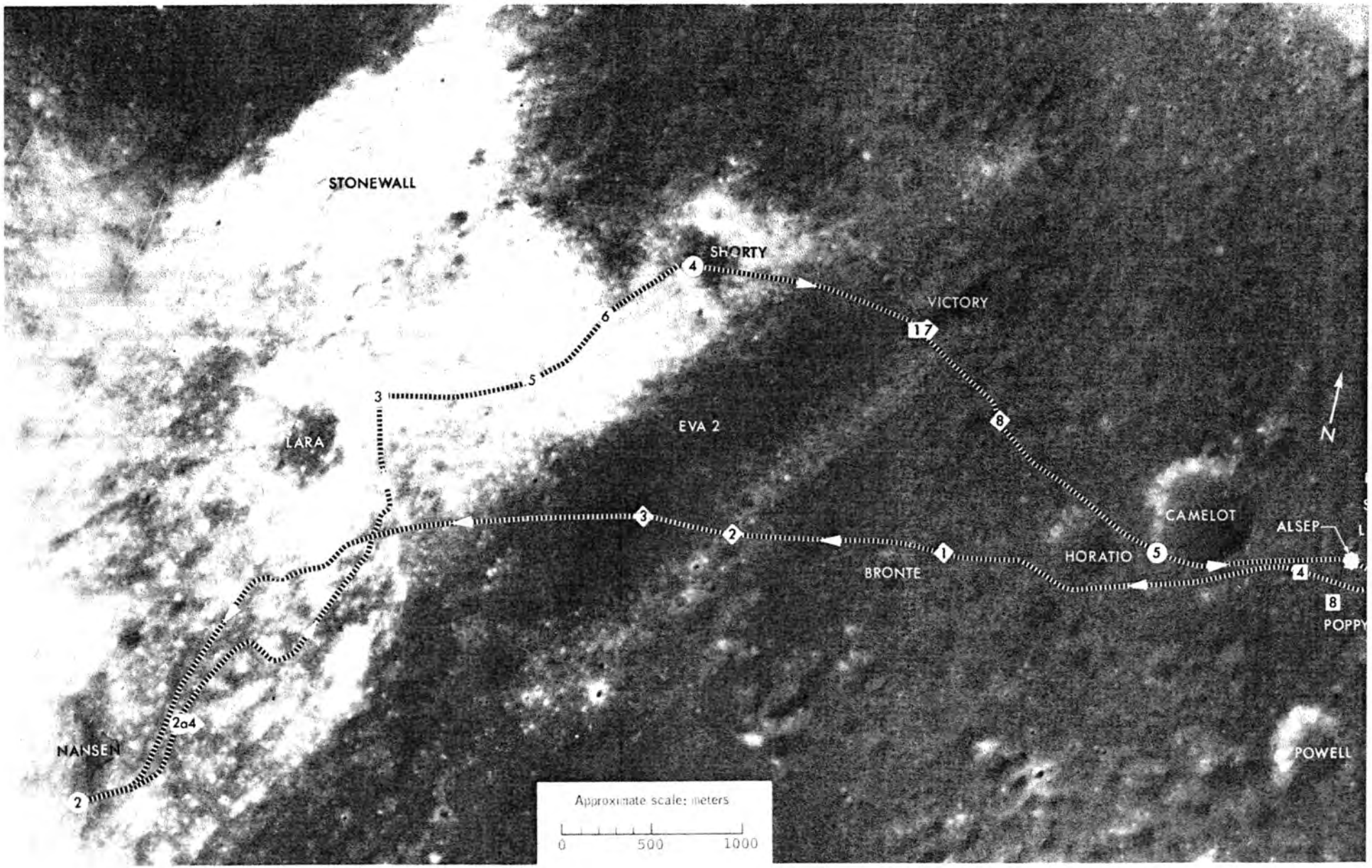
STONEWALL
SHORTY
VICTORY
LARA
EVA 2
CAMELOT
ALSEP
HORATIO
BRONTE
POPPY
NANSEN
POWELL
N
Approximate scale: meters
0
500
1000

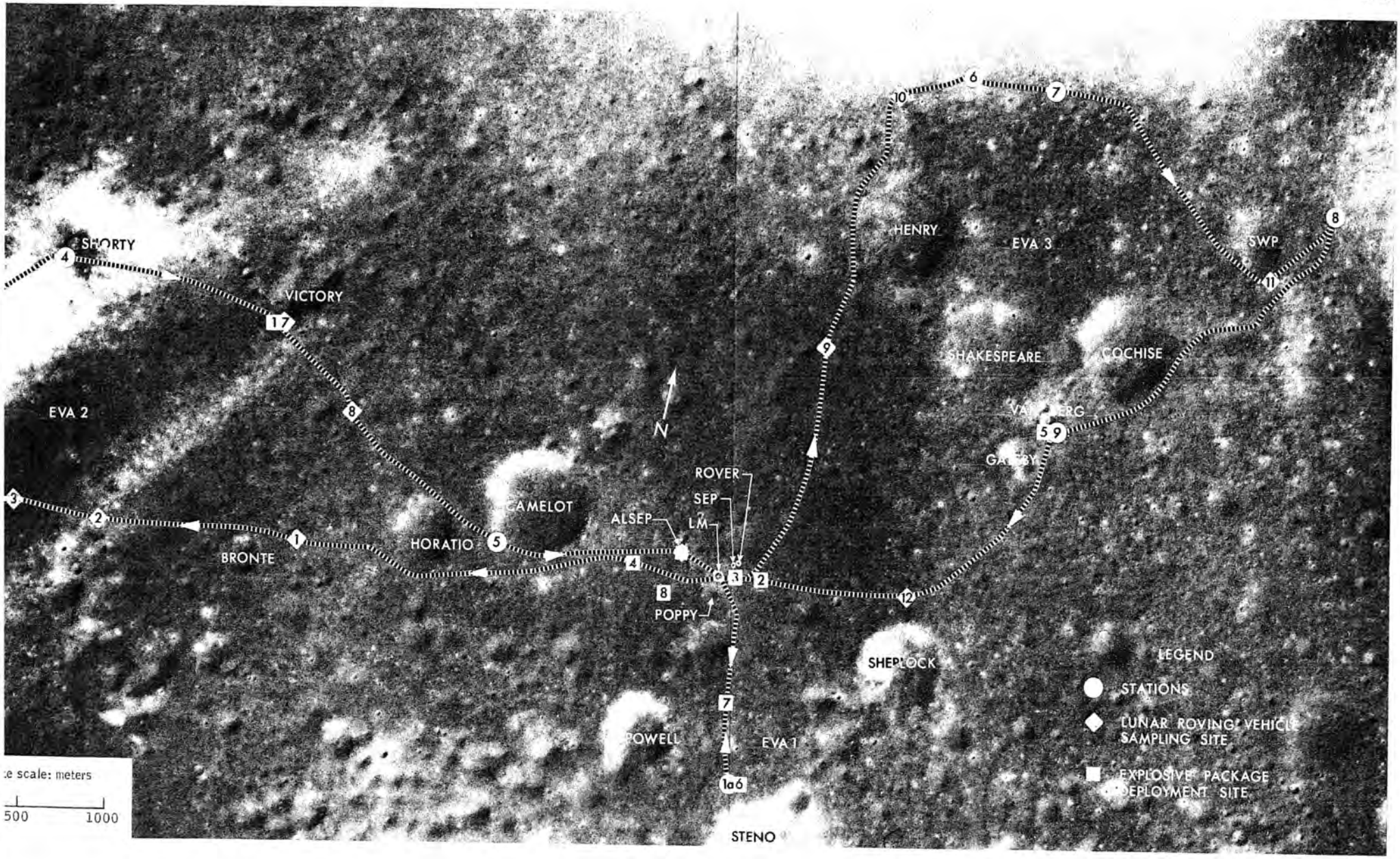

Figure 3-12.- Apollo 17 extravehicular activity traverses.

3.2.7 Geology and Soil Mechanics Equipment

3.2.7.1 Apollo lunar surface handtools.- The Apollo lunar surface handtools consisted of the items listed in table 3-II and illustrated in figure 3-13. The tools were continually upgraded as the lunar landing missions progressed based on the results of preflight and postflight evaluations and on geology requirements. The more significant changes are discussed in the following paragraphs.

a. Hammer: The hammer was used during all Apollo lunar surface extravehicular activities. As experience was gained, the hammer was modified as follows.

1. The spray aluminum coating on the head was changed to vacuum-deposited aluminum.

2. The originally pinned handle-to-head connection was changed to a "magnaformed" head.

3. The head was made heavier and larger to assist in obtaining better drive tube penetration.

4. Room-temperature-vulcanizing material strips were added to the handle to minimize twisting of the hammer in the hands.

b. Scoop: The scoop originally had a large pan and was nonadjustable. On Apollo 15, the design was changed to incorporate a smaller pan and an adjustable head. On Apollo 16 and 17, the adjustable feature was maintained but the pan was enlarged to obtain a larger sample.

c. Extension handle: The extension handle was designed to be mated with core tubes, scoops, hammer, and rake. Field tests and flight evaluation indicated that the original handle design should be changed to prevent shearing of the core-tube adapter pins. Also, further evaluations indicated that a longer handle was desirable. Two handles were carried on the Apollo 16 and 17 missions instead of one.

d. Gnomon: The gnomon consisted of a gimbaled rod and a color chart mounted on a tripod. The rod indicated the gravitational vector, and the chart provided a standard for color comparison in photographic processing. (Before the Apollo 14 mission, a color chart was carried separately.) Postflight evaluations following the initial lunar landing missions indicated that the rod would oscillate for long periods of time before damping to a fixed position. The cumulative time in awaiting rod arrestment was severely restrictive to the overall surface activity. Therefore, a damping change was incorporated for the Apollo 15 through 17 missions. On Apollo 16, the gimbaled rod separated from the leg assembly while the gnomon was being removed from its stowage bag. To prevent recurrence on Apollo 17, the gimbal pivot pins were strengthened and additional lubrication was applied to the pivot/bearing interface.

e. Tongs: The tongs consisted of a set of opposing spring-loaded fingers attached to a handle and were used for picking up samples. Postflight evaluation of Apollo missions 11, 12, and 14 indicated a need for increased length, larger jaws, and additional closing force. These changes were incorporated for Apollo missions 15 through 17. Also, to conserve traverse time and to afford maximum flexibility in obtaining samples, two sets of tongs were carried on the Apollo 16 and 17 missions.

f. Adjustable trenching tool: The trenching tool was used on only one mission, Apollo 14. Experience indicated that the adjustable scoop could perform the trenching task on subsequent missions.

g. Rake: A rake was designed and built for the Apollo 15, 16, and 17 missions to meet the requirement of efficiently obtaining a number of small rock samples from the lunar surface or just below the surface. The rake served its purpose satisfactorily.

h. Core tubes/drive tubes/caps: The core tubes were originally designed to be driven into the lunar surface with the hammer. Postflight examination of the Apollo 11 samples indicated that the bit was degrading the samples. Furthermore, additional information on the cohesiveness of the lunar soil indicated that a "drive tube" with a larger diameter (increased from 2 to 4 centimeters) and an integral bit could be used. Effective with the Apollo 15 mission, drive tubes were successfully used to obtain samples. The components of a drive tube set consisted of

TABLE 3-II.- GEOLOGY AND SOIL MECHANICS TOOLS AND EQUIPMENT

Item	Mission use					
	11	12	14	15	16	17
Apollo lunar surface hand tools:						
Hammer	1	1	1	1	1	1
Large scoop	1	1	1			
Adjustable scoop				1	1	1
Extension handle	1	1	1	1	2	2
Gnomon	1	1	1	1	1	1
Tongs	1	1	1	1	2	2
Adjustable trenching tool			1			
Rake				1	1	1
Core tubes	2	4	6			
Core tube caps	2	1				
Drive tubes (lower)				5	5	5
Drive tubes (upper)				4	4	4
Drive tube cap and bracket assembly				3	5	5
Drive tube tool assembly					1	1
Spring scale	1	1				
Sample scale			1	1	1	1
Tool carrier				1	1	
Sample return container	2	2	2	2	2	2
Bags and special containers:						
Small sample bags	5					
Documented sample bags (15-bag disp)	1	3	1			
Documented sample bags (20-bag disp)				6	7	6
Documented sample bags (35-bag disp)		1	2			
Round documented sample bag						48
Protective padded sample bag					2	
Documented sample weigh bag	2	4	4			
Sample collection bag				2	2	2
Gas analysis sample container	1	1				
Special environmental sample container		1	3	3	1	1
Core sample vacuum container					1	1
Solar wind composition bag	2	1	1			
Magnetic shield sample container			1			
Extra sample collection bags				4	6	6
Organic control sample		1	2	2	2	
Lunar surface sampler (Beta cloth)					1	
Lunar surface sampler (velvet)					1	
Lunar roving vehicle soil sampler						1
Magnetic sample assembly					1	
Tether hook	1	1	1			
Lunar surface drill				1	1	1
Core stem with bit				1	1	1
Core stems without bit				5	5	5
Core stem cap and retainer assembly				2	2	2
Self-recording penetrometer				1	1	

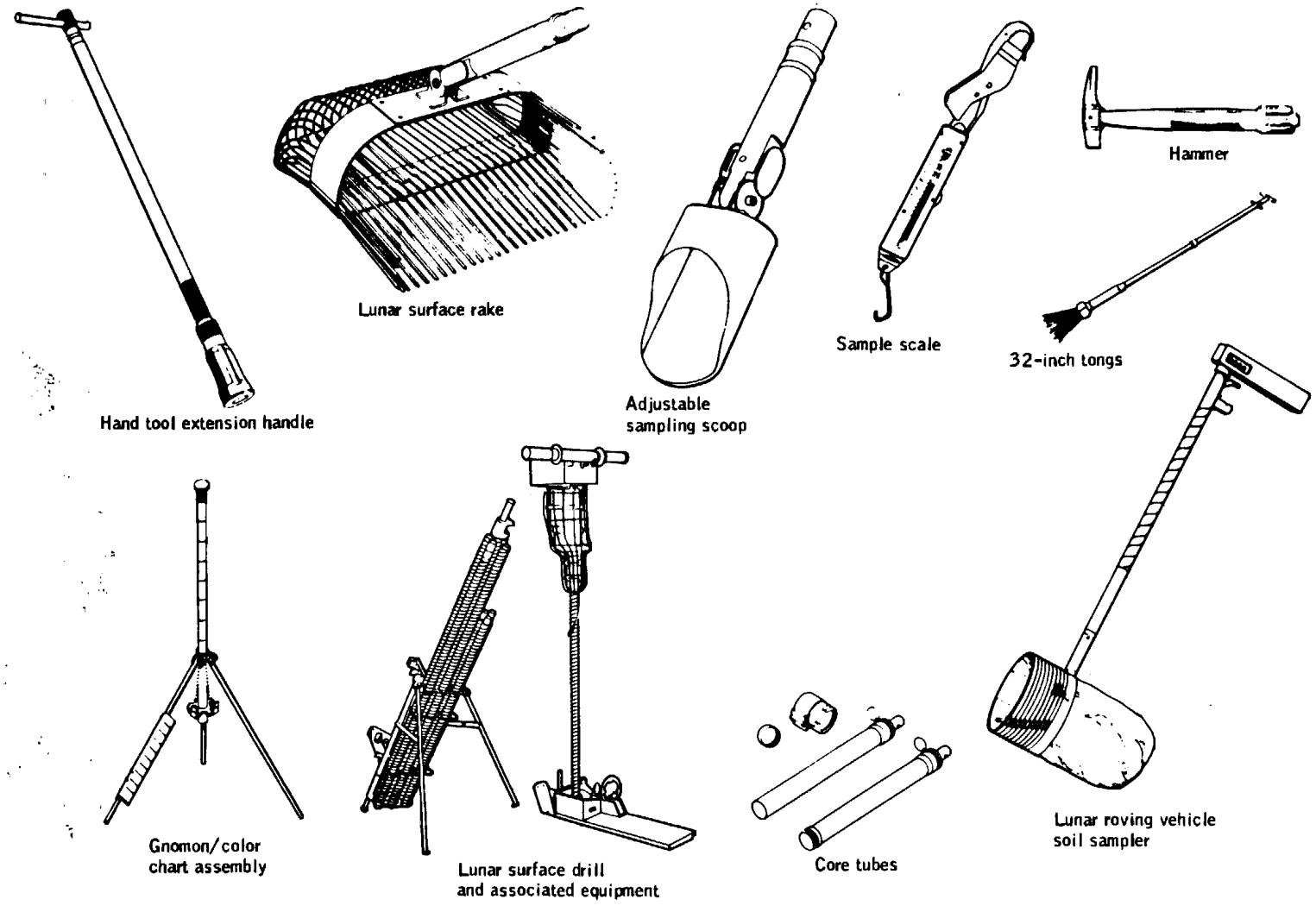

Figure 3-13.- Lunar geology and soil mechanics tools.

the drive tube, a drive-tube tool, and a cap dispenser. Deep samples were obtained by joining tubes in series. The drive-tube tool was used to position a keeper against the core sample to preserve its integrity. The cap dispensers were mounted on the handtool carrier and contained Teflon caps to seal the tubes after sample collection.

i. Sample scale: The sample scale was used on Apollo 14 through 17 to weigh lunar samples before lift-off to assure that the total weight did not exceed the permitted weight.

3.2.7.2 Tool carriers.- The original Apollo lunar handtool carrier was designed to accommodate the early tool configurations and to be hand-carried or mounted on the modular equipment transporter used on the Apollo 14 mission. With the advent of the lunar roving vehicle, a new tool carrier was needed that could be mounted on that vehicle or, if the vehicle became inoperative, could be removed and hand-carried during walking traverses. The modified tool carrier was used as a stowage rack for the hammer, gnomon, scoop, and the drive-tube tool assembly; the tool carrier also accommodated the extension handle and the tongs.

3.2.7.3 Apollo lunar sample return container.- The Apollo lunar sample return container (fig. 3-14) was designed to provide a vacuum environment for the return of lunar samples. The containers and their contents were cleaned at the manufacturing facility to a cleanliness level of less than 10 nanograms of residue per square centimeter. The containers and their contents were then shipped to the Lunar Receiving Laboratory for premission conditioning, which consisted of sterilization to remove earth organisms before sealing under a vacuum (approximately 10^{-6} torr).

No major design changes were made throughout the lunar landing flights. However, the following minor changes were incorporated.

a. A York mesh liner was added on Apollo 12 to give better protection to the container and its contents, and the liner was reduced in thickness to increase the volume of the container.

b. On Apollo 14 and subsequent missions, a skirt was added to prevent debris from getting into the seal, to facilitate closing, and to ensure maintenance of vacuum.

Two organic samplers (fig. 3-15), each consisting of several rolls of York mesh packing material in a Teflon bag, were used to determine the quantity of organic compounds introduced before and during the translunar portion of a mission. One sampler was analyzed and sealed before flight. The other was placed in the sample return container, removed for environmental exposure while on the lunar surface, sealed, and returned to the container.

3.2.7.4 Bags and special containers.- In addition to the actual collection of samples, a requirement existed to protect, document, and identify the various samples. To perform these tasks, numerous types of bags and special containers were designed, some of which are described in the following paragraphs and illustrated in figure 3-16.

a. Documented sample bags: The crewmen used documented sample bags to identify and document the individual samples as they were collected. On Apollo 17, a quantity of round sample bags were supplied. These bags were used in conjunction with the lunar roving vehicle soil sampler (par. 3.2.7.6).

b. Special environmental sample container: These devices were designed to contain samples of lunar soil and/or rocks to be used in specific experiments on return to earth. The containers provided a vacuum environment to protect the samples from contamination in case the Apollo lunar sample return container leaked.

c. Core sample vacuum container: The core sample vacuum container was provided as a receptacle for a drive tube so that a pristine subsurface sample could be protected in a vacuum.

d. Protective padded sample bag: The protective padded sample bag was used for returning a fragile lunar sample so that maximum protection could be afforded to the surface of the sample. Bags of this type were carried only on the Apollo 16 mission.

e. Documented sample weigh bags/sample collection bags: The weigh bags (Apollo 11, 12, and 14) and the sample collection bags (Apollo 15, 16, and 17) were large bags into which the documented samples were placed for insertion into the Apollo lunar sample return container for return

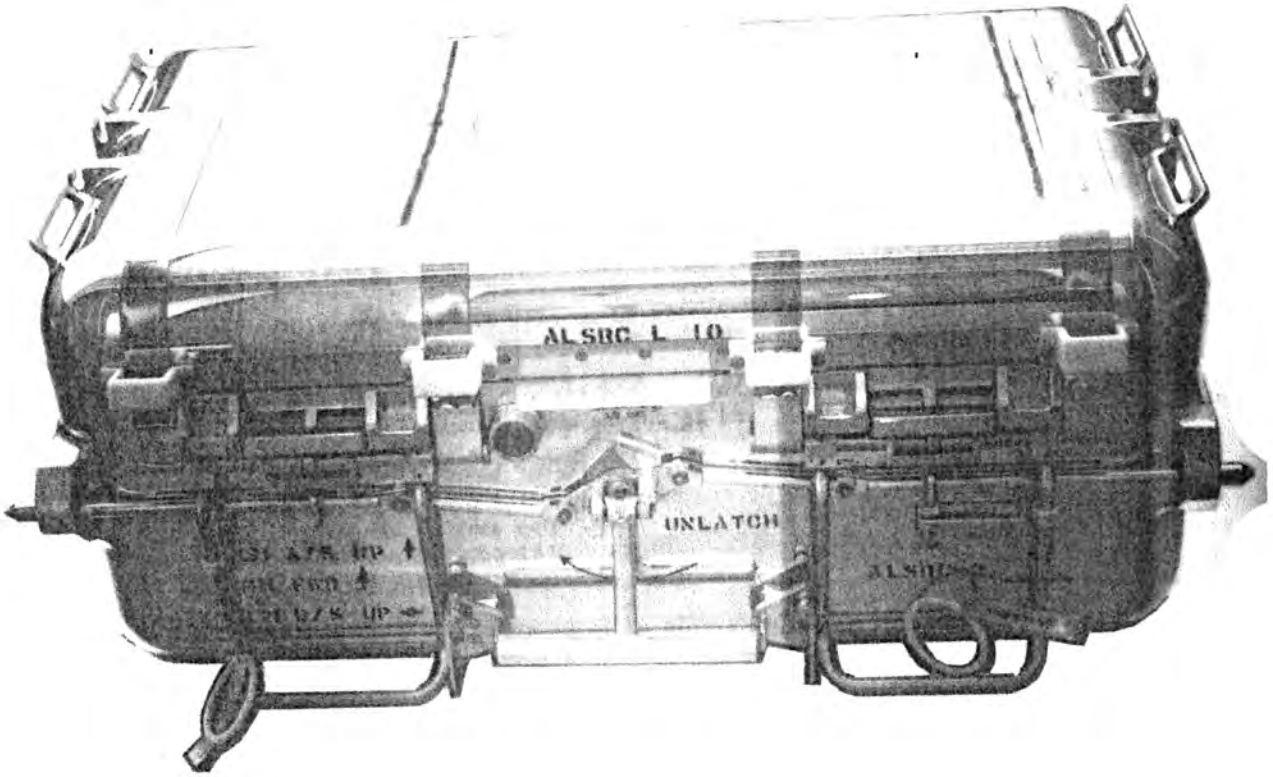

Figure 3-14.- Apollo lunar sample return container.

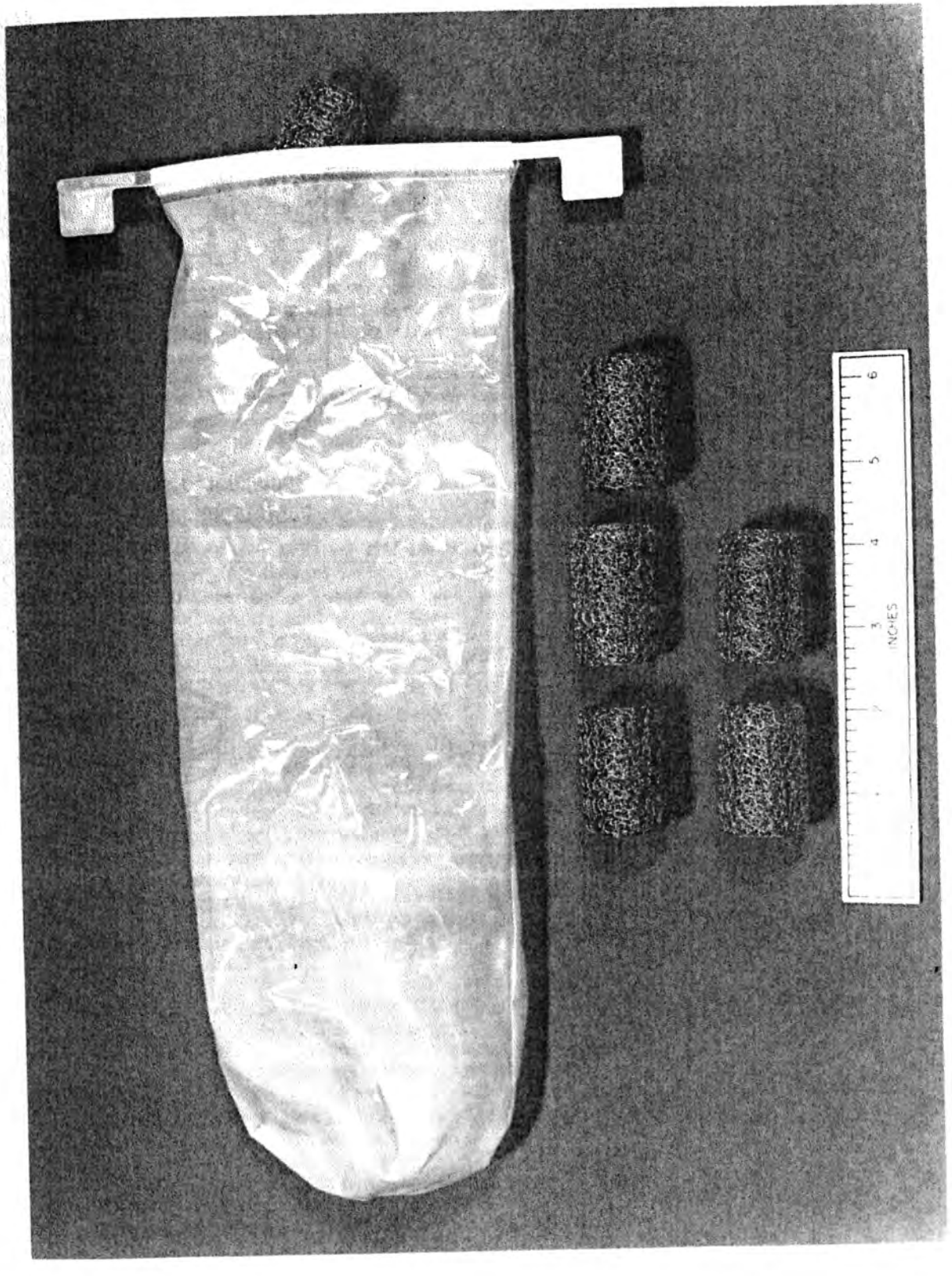

Figure 3-15.- Organic sampler.

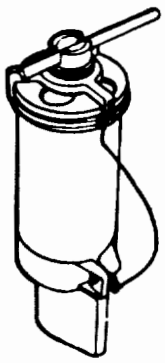

Special environmental sample container

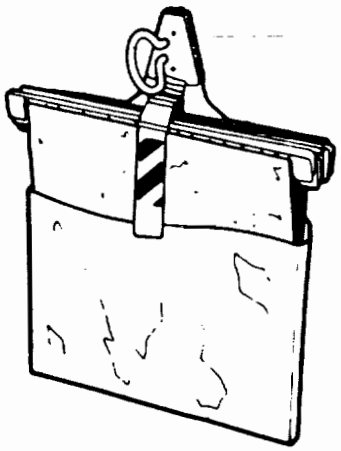

Documented sample bag dispensers

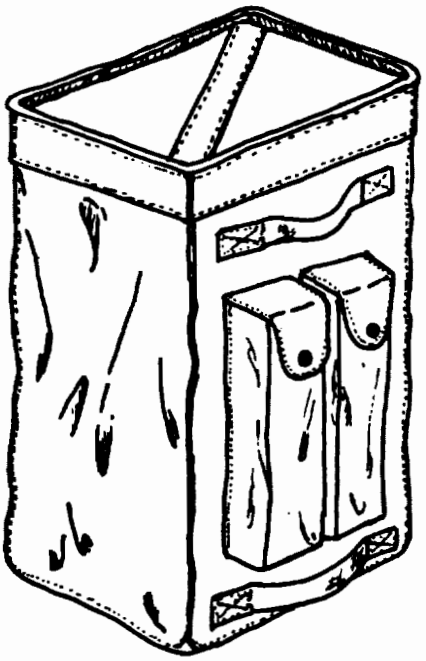

Sample collection bag

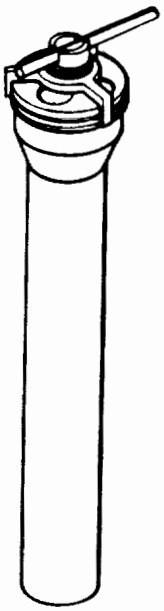

Core sample vacuum container

Figure 3-16.- Sample bags and special containers.

to earth. The bags were originally made of Teflon film; however, after postflight evaluation indicated that this material would tear, the design was changed to incorporate a laminated Teflon fabric/Teflon film, and the name was changed from sample weigh bags to sample collection bags.

3.2.7.5 Lunar surface sampler.- The lunar surface sampler was used with the universal handling tool. The device, which consisted of a plate assembly that contained either a Beta cloth or a velvet cloth accumulation surface, was used to obtain undisturbed surface layer lunar samples. A hinged cover plate protected the sample on the return-to-earth flight.

3.2.7.6 Lunar roving vehicle soil sampler.- The lunar roving vehicle soil sampler was a device that when mated with the universal handling tool, allowed the lunar surface crewman to obtain soil samples without dismounting from the lunar roving vehicle.

3.2.7.7 Penetrometers.- On the Apollo 14 mission, the active seismic experiment geophone cable anchor shaft was used as a simple penetrometer to obtain soil mechanics data. The 0.87-centimeter-diameter 68.0-centimeter-long aluminum shaft had a 30° core tip at the bottom and was attached to the extension handle at the top. Alternating black and white stripes, each 2.0 centimeters long, provided a depth scale reference in photographs of the penetrations achieved. The crewman pressed the penetrometer into the lunar surface with one hand for a first measurement and then with two hands for a second measurement. Preflight 1/6-earth-gravity tests provided a comparative calibration for the penetrometer.

A self-recording penetrometer, used on the Apollo 15 and 16 missions (fig. 3-17), provided for the first time quantitative measurement of forces of interaction between the soil near the lunar surface and a soil testing device. The instrument provided data on soil penetration resistance as a function of depth below the lunar surface. The penetrometer could penetrate the lunar surface a maximum of 76 centimeters. On the Apollo 15 mission, the penetrometer could measure a penetration force to a maximum of 111 newtons. As a result of the Apollo 15 experience, the force spring was changed to increase the maximum measurement to 215 newtons. On the later lunar landing missions, the successful functioning of the self-recording penetrometer and core tubes, as well as the general surface-contact equipment, resulted in data which provided a basis for the quantitative study of stratigraphy, density, and strength characteristics of the lunar soil.

3.2.7.8 Apollo lunar surface drill.- The purpose of the Apollo lunar surface drill (fig. 3-18) was to provide two 2.4-meter-deep holes for emplacement of probes for the heat flow experiment. The drill was also used to obtain a continuous subsurface core sample that was 2.4 to 3.0 meters long to be returned to earth for laboratory analyses. In addition, on Apollo 17, the hole produced by the core drilling was used for emplacement of the neutron probe experiment.

The drill was a battery-powered, electric-drive, rotary-percussion-type drill which delivered vertical blows to the rotating spindle, driving carbide-tipped hollow bore stems and core stems. The boron-fiberglass bore stems and titanium core stems were sectionalized, allowing the desired penetration into the lunar surface while maintaining the capability for handling and stowage by the lunar surface crewmen.

Two significant hardware changes resulted from mission experience: bore stem joint redesign and the incorporation of a deep-core extractor. Both changes were made because of the high density of the lunar subsurface encountered on Apollo 15. Before that mission, the subsurface density data had been based on drive-tube core information, which supported Surveyor data that showed the bulk density of the regolith to be relatively low (90 to 110 pounds per cubic foot). This soil density was used for drill testing. However, these samples had been taken from a depth of only 0.6 to 0.9 meter. When the Apollo 15 drill went beyond this depth, the density increased significantly (to 130 pounds per cubic foot). With this additional knowledge, a new bore stem design was introduced and tested in simulated soil models compacted to a maximum bulk density. Other changes included a core-stem extractor that was developed to provide additional capability for jacking the deep-core sample from the subsurface. The changes were incorporated for the Apollo 16 mission.

A continuous improvement in drill performance was obtained from one mission to the next. In each case, the effectiveness of the hardware improvements was demonstrated. Time lines for the drill-associated tasks were nominal for Apollo 16 and 17.

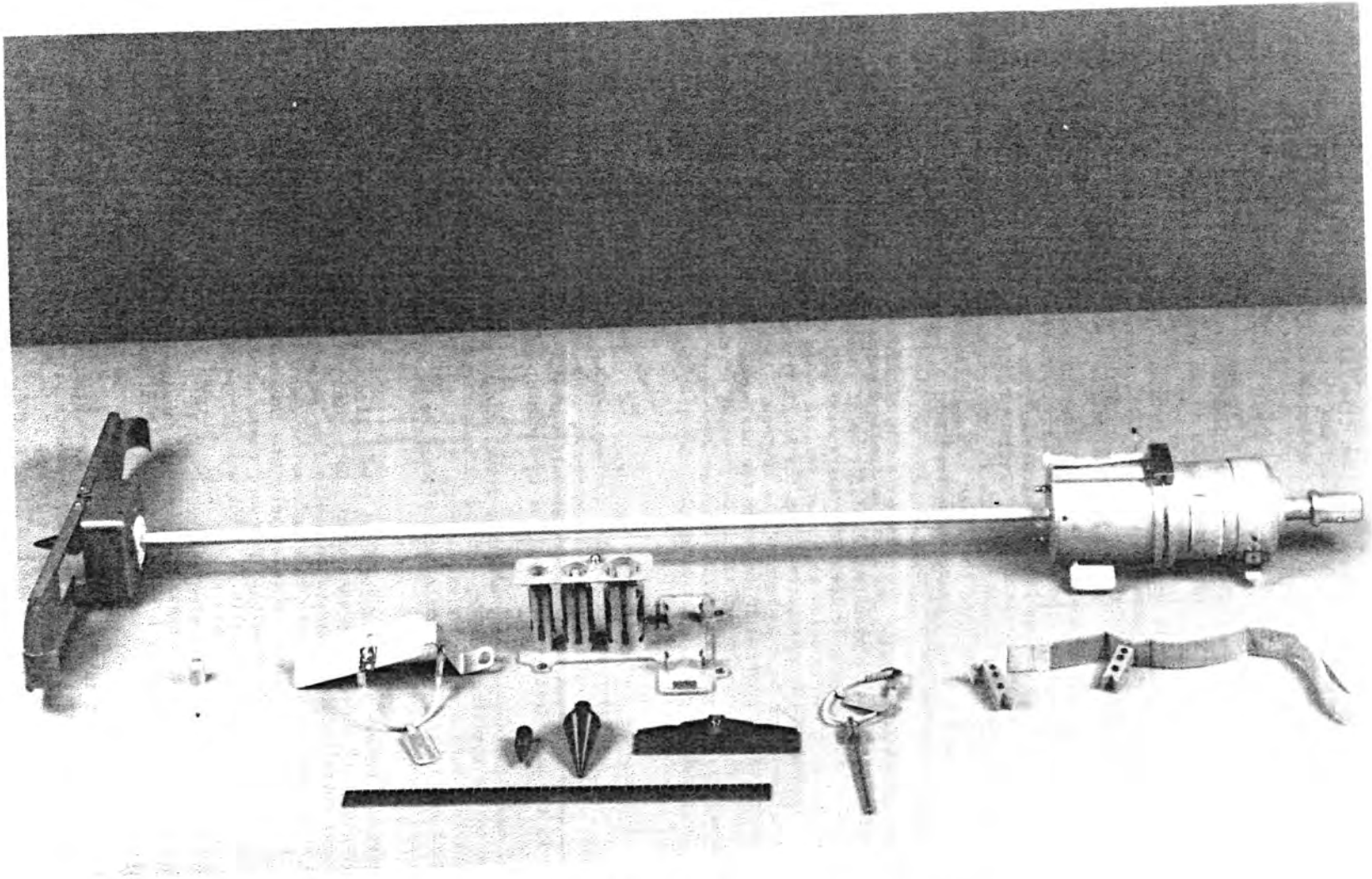

Figure 3-17.- Self-recording penetrometer.

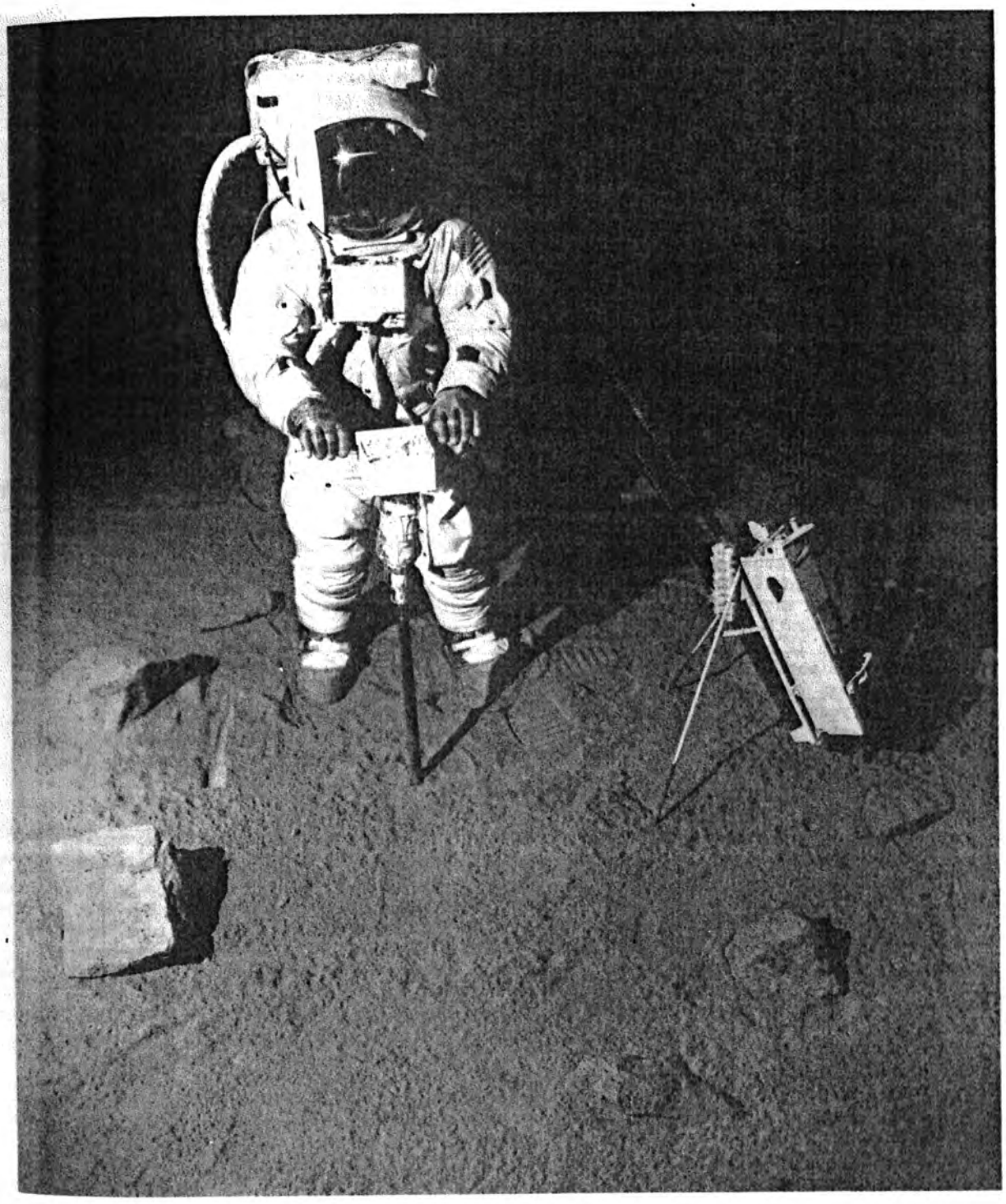

Figure 3-18.- Apollo lunar surface drill.

3.2.8 Apollo Lunar Surface Experiments Package/Central Station

As reflected in table 3-I, a number of experiments were deployed or conducted on the lunar surface during the six lunar landing missions. To minimize weight, volume, and power requirements, several experiments were integrated into a single system, the Apollo lunar surface experiments package. The experiments that comprised the package varied from mission to mission, as shown in table 3-III. The other lunar surface experiments were self-contained.

Figure 3-19 illustrates a typical Apollo lunar surface experiments package (Apollo 15 configuration). Subpackage 1 contained magnetometer, passive seismic, and solar wind spectrometer experiments. The lower portion of subpackage 1 housed the central electronics which included the data handling, radio-frequency up-link and down-link, and power conditioning and distribution subsystems. In the erected configuration, the electronic and thermal control portions of subpackage 1 are known as the central station. A helical S-band antenna was also carried on subpackage 1. The antenna was attached to an aiming mechanism and an antenna mast that was locked into the primary structure. Subpackage 2 consisted of a rigid structural pallet on which were mounted one or two experiments, a radioisotope thermoelectric generator, the antenna aiming mechanism, special deployment tools, and, on two flights only, the geological handtool carrier. All equipment was removed from subpackage 2 except the generator. Because the fuel element for the generator was very hot, the fuel element was carried to the moon in a separate protective cask assembly. The fuel cask assembly and the two subpackages were stowed as shown in figure 3-20.

The radioisotope thermoelectric generator developed for the Apollo lunar surface experiment package was designated "system for nuclear auxiliary power no. 27" (SNAP-27). Differing in design and materials from the previously developed SNAP-19 generator (for Nimbus and Pioneer), SNAP-27 has been the only nuclear power generator developed for manned fueling and has the largest power output of those developed for space use. Although the original design specification was for a 50-watt generator, the output developed by the actual flight hardware exceeded 70 watts in the hard vacuum environment - sufficient to handle the Apollo lunar surface experiment package power requirements which kept increasing for the growing science program. Initial power output for Apollo 12 on the lunar surface was 74 watts (66.5 watts after 4 years), for Apollo 14 was 73 watts (68 watts after 3 years), for Apollo 15 was 75 watts (69.4 watts after 3 years), for Apollo 16 was 70.9 watts (69.5 watts after 2 years), and for Apollo 17 was 77.5 watts (76.9 watts after 1 year). The actual rate of decrease in output (primarily the result of changes in the lead telluride material from time, temperature, and pressure) for all five flight radioisotope thermoelectric generators has been considerably less than calculated predictions (about one-fourth the design specification rate).

The Apollo lunar surface experiments package systems flown on Apollo missions 12 through 16 were designed for a nominal lunar operating period of 1 year. The system flown on Apollo 17 incorporated various design improvements to meet a requirement of 2 years of lunar operation and to eliminate operational problems encountered on earlier systems. These changes can be broadly categorized into: the use of logic elements with improved reliability, added redundancy with refined techniques for redundant component selection, and design improvements based on lunar operating experience. Plans were that when the output of the radioisotope thermoelectric generator decreased to a level too low to provide enough power for the full complement of experiments in the worst case condition (lunar sunrise), selected experiments would be commanded off or to a standby mode for lower power demand. Consequently, on June 14, 1974, three experiments (Apollo 12 lunar surface magnetometer, and Apollo 15 lunar surface magnetometer and solar wind spectrometer, all of which had been unable to provide science data for an extended period) were terminated so as to make more power available for other experiments. These were the first experiments in the Apollo lunar surface experiments package program to be terminated by command. The only other experiment to have its operation on the lunar surface terminated was the Apollo 12 cold cathode gage experiment, which turned itself off in November, 1969, because of a circuit failure.

Overall operation of the Apollo lunar surface experiments package central station has been excellent in all areas of the mechanical, thermal, and electrical designs. All central stations deployed on the lunar surface continue to operate as planned; the Apollo 12 central station has exceeded its 1-year life requirement by more than 3 years. Although no signal processing component failure has occurred during lunar operation, numerous operational abnormalities have required procedural changes. The more significant problems and failures occurring during the hardware test phase and lunar operation are summarized in the following paragraphs.

TABLE 3-III.- APOLLO LUNAR SURFACE EXPERIMENTS PACKAGE ARRAYS AND STATUS

Experiment	Apollo 12	Apollo 13	Apollo 14	Apollo 15	Apollo 16	Apollo 17
	Array A	Array B	Array C	Array A-2	Array D	Array E
[a]Passive seismic	Short-period Z axis has displayed reduced sensitivity since deployment.	Not deployed.	Long-period Z axis inoperative since 3/20/72. Noisy data on long-period Y axis since 4/14/73.	Full operation.	Full operation.	
Active seismic			Mortar not fired. Geophone 3 data noisy since 3/26/71. Geophone 2 data invalid since 1/3/74.		Three of four grenades launched. Mortar pitch sensor off scale after third firing on 5/23/72.	
Lunar surface magnetometer	Permanently commanded off 6/14/74.			Permanently commanded off 6/14/74.	Full operation.	
Solar wind spectrometer	Full operation except for intermittent modulation drop in two proton energy levels each lunation since 11/5/71.			Permanently commanded off 6/14/74.		
Suprathermal ion detector	Periodically commanded off to prevent high voltage arcing at elevated lunar day temperatures since 9/9/72.		Periodically commanded to standby operation to avoid mode changes at elevated lunar day temperatures since 3/29/72.	Periodically commanded to standby operation to avoid mode changes at elevated lunar day temperatures since 9/13/73.		
Heat flow		Not deployed.		Probe 2 not to full depth intended, but experiment provides useful data.	Inoperative since emplacement.	Full operation.
Cold cathode ion gage	Inoperative. Failed 14 hours after turn-on 11/20/69.	Not deployed.	Intermittent science data since 3/29/72.	Intermittent science data since 2/22/73.		
Lunar ejecta and meteorites						Thermal control design not optimum for Apollo 17 site. Instrument operated for about 75 percent of lunation.

TABLE 3-III.- APOLLO LUNAR SURFACE EXPERIMENTS PACKAGE ARRAYS AND STATUS - Concluded

Experiment	Apollo 12	Apollo 13	Apollo 14	Apollo 15	Apollo 16	Apollo 17
	Array A	Array B	Array C	Array A-2	Array D	Array E
Lunar seismic profiling						Full operation; however, operation is limited to prevent interference with other experiments.
Lunar atmospheric composition						No science data since 10/17/73. Instrument is periodically cycled off for temperature control.
Lunar surface gravimeter						Instrument error prevents normal operation. Some science data being received using other modes of operation.
[a]Laser ranging retroreflector			Full operation.	Full operation.		
Charged particle lunar environment		Not deployed.	Analyzer B failed 4/8/71. Analyzer A undervoltage condition since 6/6/71. Instrument operated 50 percent of each lunation.			
[a]Dust detector	Full operation	Not deployed.	Full operation.	Full operation		
[a]Central station	Data processor Y apparently failed 5/3/74. Normal operation using processor X.	Not deployed.	Full operation	Full operation.	Full operation.	Full operation.

[a]Included in early Apollo scientific experiments package deployed on Apollo 11 mission. Laser ranging retroreflector remains in full operation.

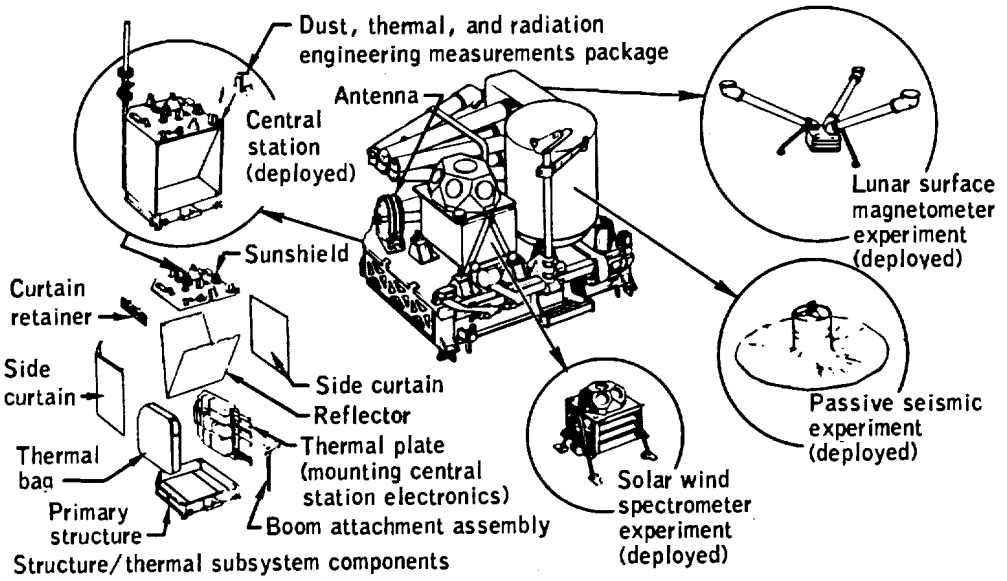

(a) Subpackage 1

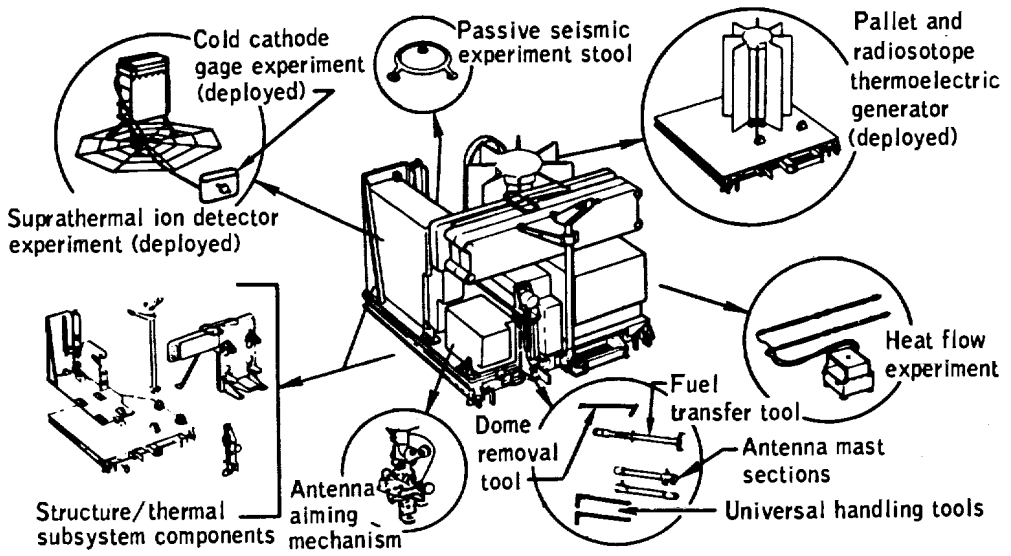

(b) Subpackage 2

Figure 3-19.- Apollo 15 lunar surface experiments package.

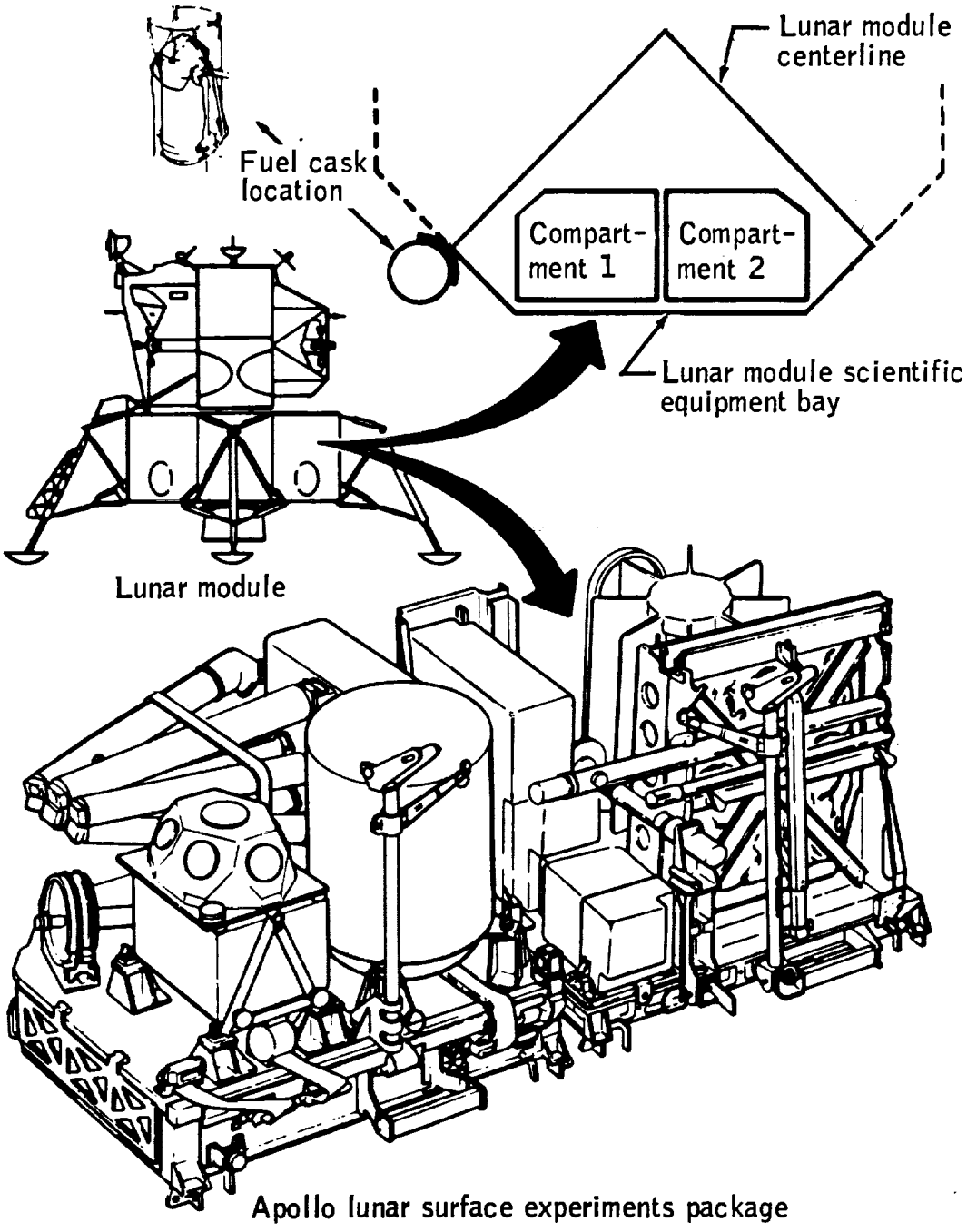

Figure 3-20.- Stowage of Apollo lunar surface experiments package in lunar module.

a. Analog multiplexer - analog/digital connector: The system uses a 90-channel analog multiplexer the output of which is digitized to an 8-bit word. Earlier designs used plastic-encapsulated field-effect transistor switches in the multiplexer input; the transistors were subjected to prescribed tests and burn-in to assure reliability. During ground tests, numerous transistor failures occurred. The failures were traced to contamination due to the transistors not being adequately sealed. However, no Apollo 12 and 14 lunar surface experiments package failures occurred on the lunar surface. The design used on the Apollo 15 experiments package was upgraded to use a field-effect transistor in a ceramic package. The components used on the Apollo 16 and 17 experiments packages were completely redesigned with full redundancy on all 90 analog channels.

b. Unexpected status changes: The demodulator section of the command decoder proved to be sensitive to receiver noise output occurring in the absence of an up-link signal. In operation, however, this condition did not prove to be a major problem. Operational procedures were modified to assure that the system was illuminated with an up-link signal, rendering the demodulator section insensitive to noise when the crew was on the surface immediately following deployment. On the Apollo 16 package, a new receiver design resulted in a lower noise sensitivity; on the Apollo 17 system, a new decoder design completely eliminated the problem.

3.2.9 Passive Seismic Experiment

The passive seismic experiment was designed to detect vibrations of the lunar surface and provide data that can be used to determine the internal structure, physical state, and tectonic activity of the moon. A secondary purpose is to determine the number and mass of meteoroids that strike the lunar surface. The instrument is also capable of measuring tilts of the lunar surface (tides) and changes in gravity.

The first of five passive seismometers was emplaced on the lunar surface during the Apollo 11 mission. This instrument was part of the early Apollo scientific experiments package and was powered by a solar panel array rather than by the radioisotope thermoelectric generator used on the later missions. The instrument supplied long-period seismometer data for 20 days during the first and second lunar days after emplacement (a period of about 1 month). Short-period seismometer data were received for a longer time, with down-link transmissions ending approximately 4-1/2 months after activation.

The four seismic stations emplaced during the Apollo 12, 14, 15, and 16 missions comprise a network that spans the near side of the moon in an approximate equilateral triangle with 1100-kilometer spacing between stations. (The Apollo 12 and 14 stations are 181 kilometers apart at one corner of the triangle.) As shown in figure 3-21, four seismometers are included in the experiment package at each station: three low-frequency components forming a triaxial set (one sensitive to vertical motion and two sensitive to horizontal motion), and a high-frequency component sensitive to vertical motion. Of the 16 separate seismometers, all but three are presently operating properly. The high-frequency component at the Apollo 12 station has failed to operate since initial activation. One of the low frequency seismometers at the Apollo 14 station (Z-axis) became inoperative after 1 year of operation and another (Y-axis) began transmitting noisy data midway through 1974. The frequency ranges of the passive seismic experiment components are compared to the ranges of other lunar surface seismic instruments in table 3-IV.

Several of the stations have exhibited thermal control problems. For collection of tidal data, limiting the instrument operating temperature to a band of approximately 1.1° K is desirable. This limitation was not achieved, partly because of problems with deployment of the thermal shroud. Corrective actions included the addition of weights to the outer edges of the shroud, the use of a Teflon layer as the outer shroud covering, and stitching of the shroud to prevent layer separation. Even so, an optimum shroud deployment was not achieved. thus, the heat loss during lunar night and the solar input incurred during the lunar day have been greater than desired.

The major findings to date are summarized (ref. 3-13):

Data from the impacts of lunar module ascent stages and launch vehicle S-IVB stages, combined with data from high-pressure laboratory measurements on returned lunar samples, provide information on lunar structure to a depth of approximately 150 kilometers. Information on lunar structure below this depth is derived principally from analysis of signals from deep moonquakes and distant meteoroid impacts.

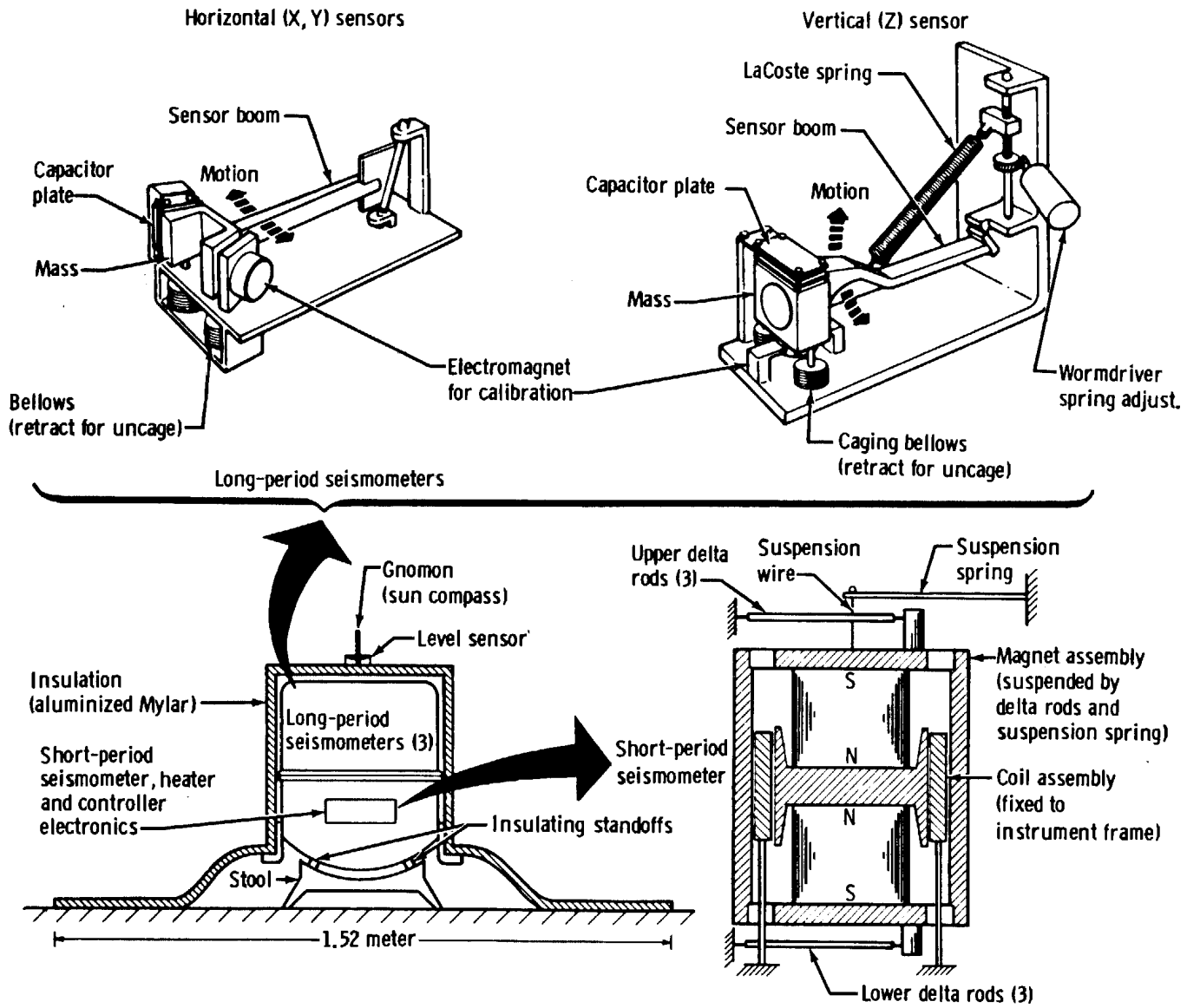

Figure 3-21. - Seismometer elements.

TABLE 3-IV.- RESPONSE SPECTRA FOR APOLLO SEISMIC EXPERIMENTS

Experiment	Sensors	Apollo sites	Frequency range, Hz
Passive seismic:			
Short period	1 vertical	[a]12, 14, 15, 16	0.05 to 20
Long period	2 horizontal	12, 14, 15, 16	0.004 to 3
	1 vertical	12, [b]14, 15, 16	0.004 to 3
Active seismic	3 vertical	[c]14, 16	3 to 250
Lunar seismic profiling	4 vertical	17	3 to 20
Lunar surface gravimeter	1 vertical	17	
Seismic			[d]0.05 to 16
Free modes			[e]0.00083 to 0.048

[a]Short-period sensor data has displayed reduced sensitivity since deployment.

[b]Long-period vertical sensor data invalid since March 20, 1972.

[c]Geophone 2 data invalid since Jan. 3, 1974.

[d]Instrument error restricting frequency range to approximately 0.001 to 2.0 Hz with poor sensitivity.

[e]Instrument error resulting in invalid data.

Analysis of the manmade impact data has revealed a major discontinuity at a depth of between 55 and 65 kilometers in the eastern part of the Ocean of Storms. By analogy with the earth, the zone above the discontinuity is called the crust and the zone below, the mantle. Below the crust, a relatively homogeneous zone extending to a depth of approximately 1000 kilometers is suggested by the nearly constant velocity of seismic waves. Although available data are not sufficient to derive a detailed seismic velocity model for the deep interior, observations of signals originating from a large meteoroid that struck the far side of the moon and from far-side moonquakes can be explained by introducing a "core" with a radius between 600 and 800 kilometers that has markedly different elastic properties than the mantle. Current moonquake activity is concentrated near the boundary between these two zones.

Moonquakes have been detected by the low-frequency seismometers of each station at average rates of between 600 and 3000 per year, depending on the station; all the moonquakes are quite small by terrestrial standards (Richter magnitude 2 or less). Thousands of even smaller moonquakes are detected by the high-frequency seismometers. Meteoroid impacts are detected by the low-frequency seismometers at average rates of between 70 and 150 per year. Although less numerous than moonquakes, meteorid impacts generate the largest signals detected.

Lack of shallow seismic activity indicates that the moon is neither expanding nor contracting appreciably at the present time. Thus, the rate of heat flow out of the moon must be approximately equal to the rate of internal heat production. The presence of a thick lunar crust suggests early, intense heating of the outer shell of the moon.

3.2.10 Active Seismic Experiment

Active seismic experiment operations were conducted on the moon during the Apollo 14 and 16 missions. The purpose of the experiment was to generate and monitor seismic waves near the lunar surface. The data are being used to study the internal structure of the moon to a depth of approximately 460 meters. A secondary objective still in progress is to monitor high-frequency seismic activity during periodic listening modes.

The active seismic experiment equipment consisted of a thumper device that contained small explosive initiators, a mortar package that contained high-explosive grenades, geophones, electronics within the Apollo lunar surface experiments package central station, and interconnecting cabling. Crewmen operated the thumpers during lunar surface activities. The mortars were designed to be fired by remote command after crew departure.

The Apollo 14 geophones were deployed as planned, and the thumper part of the experiment was completed. The thumper produced excellent seismic data although the crewman was able to fire only 13 of the 21 charges. Postflight investigation showed that a malfunction occurred because lunar soil got into the arm/fire switch mechanism and the initiator selector switch was not properly seated in the detents. For Apollo 16, the thumper was successfully modified to improve switch dust seals and to increase the torque required to move the selector switch from one detent to the next.

The Apollo 14 mortar package was deployed too close to the central station and in a position where debris would be directed toward the central station if grenades were launched. The off-nominal deployment was necessitated because of a crater at the optimum mortar package deployment location. Postflight tests showed that the central station would probably be damaged if the grenades were launched. Therefore, the Apollo 14 station grenades have not been launched.

Three grenades were launched from the Apollo 16 mortar package, but the mortar pitch sensor reading varied after the first two firings and became inoperative after the third. Since the scientific objectives of the experiment had been met, the planned fourth firing was deleted.

Analysis of the seismic signals generated by the thumper during Apollo 14 has revealed important information concerning the near-surface structure of the moon. Two compressional wave seismic velocities were measured at the Fra Mauro site. The near-surface material has a seismic wave velocity of 104 meters per second. Underlying this surficial layer at a depth of 8.5 meters, the lunar material has a velocity of 299 meters per second. The measured thickness of the upper unconsolidated debris layer is in good agreement with geological estimates of the thickness of the regolith at this site.

Combining the seismic refraction results from the active seismic experiment and the lunar module ascent seismic data recorded by the Apollo 14 passive seismic experiment allows estimates of the thickness of the underlying material to be made. These estimates range from 38 to 76 meters and may indicate the thickness of the Fra Mauro Formation at this particular site (ref. 3-14).

Two compressional wave seismic velocities have been recognized so far in the Apollo 16 data. The lunar surface material has a seismic wave velocity of 114 meters per second. Underlying this surficial material at a depth of 12.2 meters, the lunar rocks have a velocity of 250 meters per second. The 114-meter-per-second velocity agrees closely with the surface velocity measured at the Apollo 12, 14, and 15 landing sites, thus indicating that no major regional differences exist in the near-surface acoustical properties of the moon.

The seismic wave velocity of the material underlying the regolith at the Apollo 16 landing site does not indicate that competent lava flows exist in the Cayley Formation at this location. Instead, this velocity suggests the presence of brecciated material or impact-derived debris of currently undetermined thickness.

3.2.11 Lunar Seismic Profiling Experiment

The purpose of the Apollo 17 lunar seismic profiling experiment was to record the vibrations of the lunar surface as induced by explosive charges, by the thrust of the lunar module ascent engine, and by the crash of the lunar module ascent stage. Analyses of these seismic data were planned to determine the internal characteristics of the lunar crust to a depth of several kilometers. A secondary objective of the experiment was to monitor lunar seismic activity during periodic listening intervals.

Strong seismic signals were recorded from the detonation of eight explosive charges that were armed and placed on the lunar surface by the crewmen at various points along the traverses. Recording of these seismic signals generated traveltime data to a distance of 2.7 kilometers. The seismic signals received from the lunar module ascent stage impact provided a valuable traveltime datum for determining the variation of seismic velocity with depth in approximately the upper 5 kilometers of the moon.

The most significant discovery resulting from the analysis of the data recorded by the lunar seismic profiling experiment is that the seismic velocity increases in a marked stepwise manner beneath the Apollo 17 landing site. A surface layer with a seismic velocity of 250 meters per second and a thickness of 248 meters overlies a layer with a seismic velocity of 1200 meters per second and a thickness of 927 meters, with a sharp increase to approximately 4000 meters per second at the base of the lower layer. The seismic velocities for the upper layers are compatible with those for basaltic lava flows, indicating a total thickness of approximately 1200 meters for the infilling mare basalts at Taurus-Littrow. Major episodes of deposition or evolution are implied by the observed abrupt changes in seismic velocity (ref. 3-15).

3.2.12 Lunar Surface Magnetometer Experiment

Magnetic field measurements have proved to be one of the most useful tools for determining the electromagnetic properties of the earth interior and solar-wind and ionospheric environments. This method was extended to the moon with the emplacement of a three-axis fluxgate magnetometer on the lunar surface during the Apollo 12 lunar stay. Similar magnetometers were deployed and activated during the Apollo 15 and 16 lunar stays.

The instrument has a sensor located at the end of each of three orthogonal booms. Three vector field components are measured in the normal mode of operation; however, the sensors may be rotated such that they simultaneously align parallel in each of the three boom axes. This alignment permits the calculation of the vector gradient in the plane of the sensor and permits an independent measurement of the magnetic field vector at each sensor position. The sensors and booms are located on a central structure which houses the central electronics and gimbal-flip unit. An evaluation of the performance of the Apollo 12 instrument resulted in the following changes to the Apollo 15 and 16 instruments.

a. The measurement range was changed from ±100, ±200, and ±400 gammas to ±50, ±100, and ±200 gammas.

b. A curtain was added over the electronics box to improve thermal control.

Intrinsic steady (remanent) magnetic fields provide a record of the magnetic field environment that existed 3 to 4 billion years ago when the lunar crustal material cooled below the Curie temperature. The Apollo 12 lunar surface magnetometer detected a remanent magnetic field of approximately 38 gammas superimposed on the geomagnetic tail, transition region, and interplanetary fields through which the moon passes during each orbit around the earth (ref. 3-16). The remanent magnetic field at the Apollo 15 site was calculated to be approximately 6 gammas (small compared to the fields at the Apollo 12, 14, and 16 sites). Since the Apollo 15 site lies near the edge of the Mare Imbrium mascon basin, the existence of little or no remanent field at that site suggests that mascons are not highly magnetic (ref. 3-17).

The bulk relative magnetic permeability of the moon has been calculated from measurements obtained in the geomagnetic-tail region to be $\mu/\mu_0 = 1.03 \pm 0.13$. Electrical-conductivity and temperature profiles of the lunar interior have been determined from solar wind magnetic field step-transient event measurements. The data presented in the following table fit the three-layer model of the moon shown in figure 3-22 (ref. 3-18). Temperature calculations are based on conductivity as a function of temperature for pure olivine.

Region	Electrical conductivity, mho/m	Temperature, °K
1	$<10^{-9}$	<440
2	$\sim 3.5 \times 10^{-4}$	890
3	$\sim 10^{-2}$	1240

Qualitatively, the inductive eddy-current response at the Apollo 15 site is similar to that at the Apollo 12 site. Observations show that the solar wind compresses the steady remanent field at the Apollo 12 site during periods of high solar plasma density (ref. 3-17).

On June 14, 1974, the Apollo 12 and Apollo 15 instruments were permanently commanded off. The Apollo 12 instrument science and engineering data had been invalid for 1 year and that of the Apollo 15 instrument for 6 months. Because of decreasing output from the radioisotope thermoelectric generators and the criticality of reserve power during lunar night, spurious functional changes could have caused the loss of functional instruments. The Apollo 16 instrument was operative at the time of publication of this report.

3.2.13 Lunar Portable Magnetometer Experiment

Portable magnetometers were used by the Apollo 14 and 16 crews. The objective of the lunar portable magnetometer measurements was to determine the remanent magnetic field at various lunar surface locations. The magnetometer actually measured low-frequency (less than 0.05 hertz) components of the total magnetic field at the surface, which includes the remanent field, the external solar field, fields induced in the lunar interior by changing solar fields, and fields caused by solar wind interactions with the lunar remanent fields. Simultaneous measurements made by the lunar surface magnetometer of the time-varying components of the field were later subtracted to give the desired resultant remanent field values caused by magnetized crustal material.

The lunar portable magnetometer consisted of a set of three orthogonal fluxgate sensors mounted on top of a tripod. The sensor-tripod assembly was connected by a ribbon cable to an electronics box. On Apollo 14, the electronics box was mounted on the modular equipment transporter; on Apollo 16, the box was mounted on the lunar roving vehicle. After positioning the tripod at the desired location, a crewman turned the power switch on, read the digital displays in sequence, and verbally relayed the data back to earth.

The Apollo 14 instrument recorded steady magnetic fields of 103 ±5 gammas and 43 ±6 gammas at two sites separated by 1120 meters. These measurements showed that the unexpectedly high (38 gamma) steady field measured at the Apollo 12 site 180 kilometers away was not unique. Indeed, these measurements and studies of lunar samples and lunar-orbiting Explorer 35 data indicate that much of the lunar surface material was magnetized at a previous time in lunar history (ref. 3-19). The magnetic field of 313 gammas measured in the North Ray Crater area during the Apollo 16 mission to the lunar highlands proved to be the highest ever measured on another body of planetary size. Other field measurements obtained by the Commander and Lunar Module Pilot at different sites along the three surface traverses varied from 121 to 313 gammas.

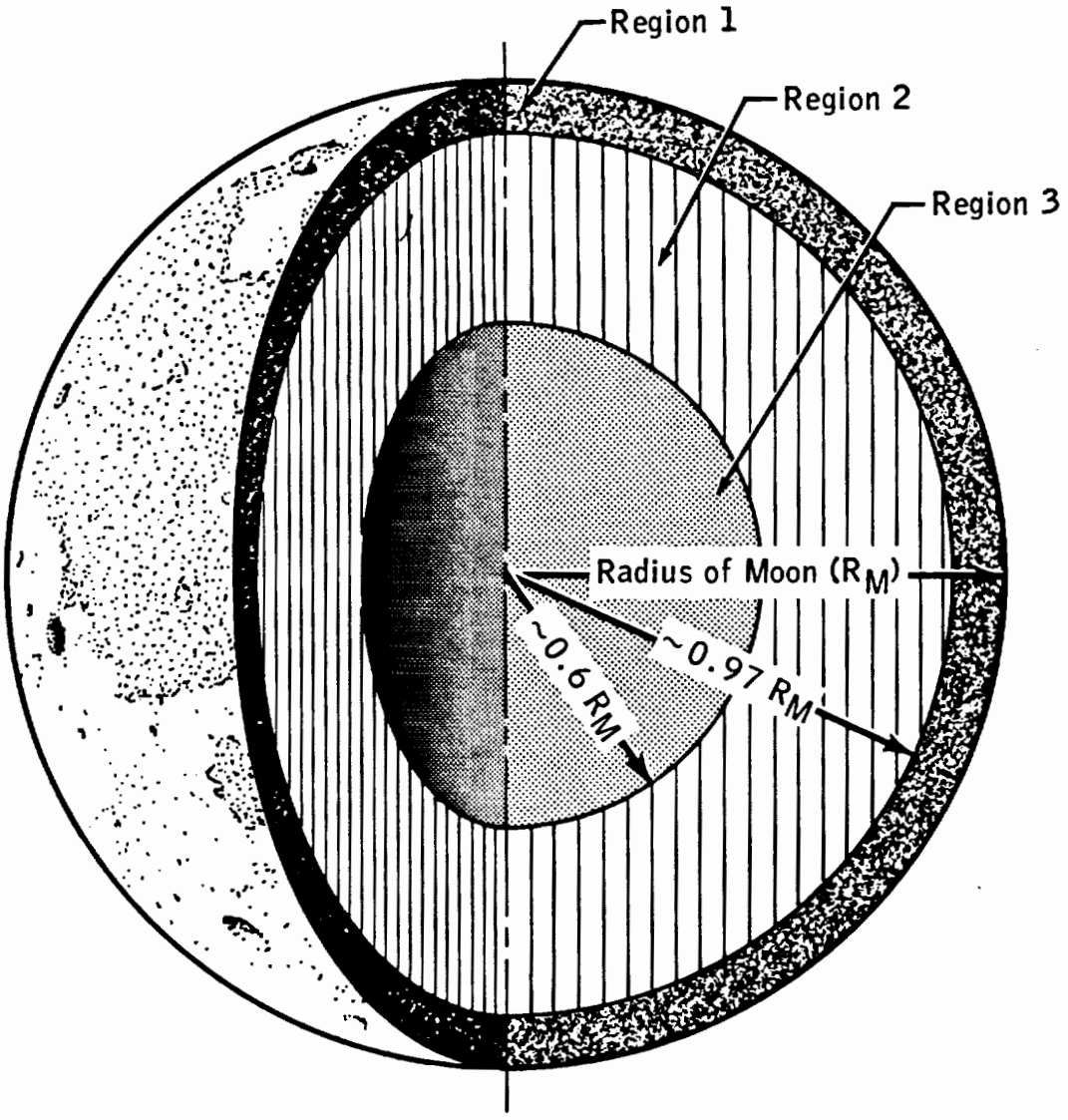

Figure 3-22.- Three-layer moon model.

Magnetic studies of returned samples indicate that they formed in a reasonably strong magnetic field (a few thousand gammas), yet there is no such field affecting the moon today. It is hypothesized that the moon had a reasonably strong magnetic field throughout much of its early history.

The surface fields provide reference values for extrapolation of subsatellite magnetometer measurements to the lunar surface. Further analysis should yield information on the geological nature and origin of lunar remanent fields, including the possibility of an ancient lunar dynamo, shock-induced magnetization, or another mechanism to account for the strong magnetization found in lunar surface samples.

3.2.14 Heat Flow Experiment

The purpose of the heat flow experiment is to determine the rate of heat flow from the lunar interior and the thermal properties of the lunar subsurface, thereby contributing to an understanding of the thermal history of the moon. Heat loss is directly related to the internal temperature and the rate of internal heat production; therefore, measurements of these quantities enable limits to be set on long-lived radioisotopic abundances (the chief source of interior heating) and the internal temperature.

The experiment hardware consists of two temperature-sensing probes and electronics for controlling and processing the measurements. Two holes, spaced about 9 meters apart, were drilled, and the probes were inserted into these holes. Sensitive thermometers within the probes accurately measure the vertical temperature gradient over approximately the lower 100 centimeters of each hole. These readings, over an extended period of time, yield the heat-flux data. Each probe also contains heating elements. When one of these elements is energized, a known quantity of heat is generated at a known distance from a temperature sensor. The resulting amount and rate of temperature change at the sensor are used to determine the thermal conductivity of the lunar material near the probe.

Heat flow experiments were successfully deployed and activated on the Apollo 15 and 17 missions. Deployment of a heat flow experiment was attempted during the Apollo 16 lunar stay; however, the cable connecting the electronics package with the Apollo lunar surface experiments package central station was inadvertently broken during experiment package deployment activities, rendering the heat flow experiment hardware inoperative. The only operational problem with the emplaced instruments has been the loss of one reference temperature reading on the Apollo 15 heat flow experiment. Because reference junction temperature measurements are redundant, there has been no loss of data. No specific failure mechanism was revealed during investigation of the circuits; therefore, no design changes were made on the Apollo 17 instrument.

The Apollo 15 and 17 measurements were made in similar regional settings, that is, on the margins of large mascon basins. Though the possibility of regional biases to these measurements remains, the evidence is strong that a major part of the lunar surface is characterized by heat flow at the upper limit of that expected from geochemical models and thermal history calculations. Results to date indicate that the average heat flow from the interior of the moon outward is approximately 3 microwatts per square centimeter, about half that of the earth (ref. 3-20).

3.2.15 Lunar Surface Gravimeter Experiment

The lunar surface gravimeter was designed to assist in the search for gravitational radiation from cosmic sources. A secondary objective is to measure tidal deformation of the moon.

The lunar surface gravimeter has three basic components: a gravity meter, a structural/thermal-control package, and an electronics package. The gravity meter uses the LaCoste-Romberg type of spring-mass suspension to sense changes in the vertical component of local gravity. The major fraction of the force supporting the sensor mass (beam) against the local gravitational field is provided by a zero-length spring (one in which the restoring force is directly proportional to the spring length). As shown in figure 3-23, small changes in force tend to displace the beam up or down. This imbalance was to be adjusted to the null position by repositioning the spring pivot points with micrometer screws. Incremental masses added by command to the sensor mass and the position of the coarse and fine micrometer screws, as read out by the shaft encoder logic, were to provide the gravity measurement.

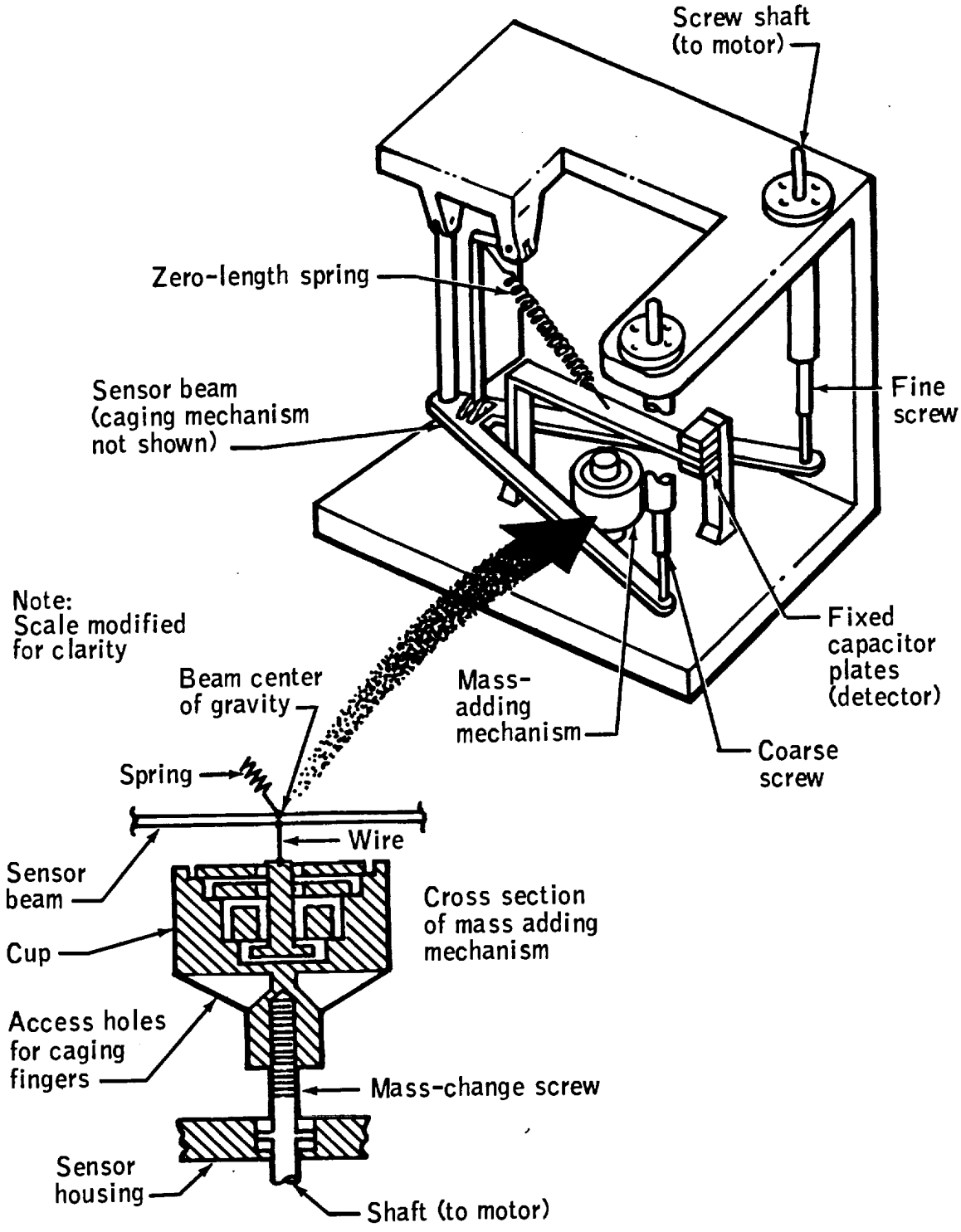

Figure 3-23.- Lunar surface gravimeter mechanism.

The instrument was deployed during the Apollo 17 lunar stay; however, following the initial experiment turn-on, the setup procedure of nulling the sensor beam in the proper stable position between capacitor plates could not be accomplished. When the command was given to add any or all of the nulling masses to the sensor beam assembly, the data indicated that the beam would not move away from the upper capacitor plate. The only way to lower the beam was to cage the beam against the lower capacitor plate. During the second and third extravehicular activities, the Lunar Module Pilot rapped the exposed top plate on the gimbal; rocked the experiment in all directions; releveled the instrument, working the base well against the surface; and verified the sunshade tilt. These actions were taken to free a mass assembly or a sensor beam that was suspected of being caught or binding, but no change was apparent. Review of sensor records revealed that an error in arithmetic resulted in the sensor masses being approximately 2 percent lighter than the proper nominal weight for 1/6-earth-gravity operation of the flight unit. The sensor mechanism allows a ±1.5 percent adjustment by ground command to correct mass inaccuracies.

Several reconfigurations of the instrument have been commanded. The sensor beam has been centered by applying a load on the beam through the mass support springs by partial caging of the mass weight assembly. In this configuration, the instrument is supplying some seismic data (ref. 3-21).

3.2.16 Traverse Gravimeter Experiment

The primary goal of the traverse gravimeter experiment was to make relative gravity measurements at a number of sites in the Apollo 17 landing area and to use these measurements to obtain information about the geological substructure. A secondary goal was to obtain the value of the gravity at the landing site relative to an accurately known value on earth. The instrument package contained a vibrating string accelerometer from which the gravity values could be determined. The preliminary gravity profile is based upon the assumption that the material underlying the valley floor consists of basalt that is 1 kilometer thick and has a positive density contrast of 0.8 grams per cubic centimeter with respect to brecciated highland material on either side. Using this model, the gravity values at the edges of the valley are 25 milligals lower than at the lunar module site, and a variation in the central part of the valley floor is within 10 milligals of the value at the lunar module site. These values will be refined based upon more elaborate models. A value of g = 162 694.6 ±5 milligals was measured at the lunar module site (ref. 3-22).

3.2.17 Surface Electrical Properties Experiment

The surface electrical properties experiment was used to explore the subsurface material of the Apollo 17 landing site by means of electromagnetic radiation. The experiment was designed to detect electrical layering, discrete scattering bodies, and the possible presence of water. The experiment data may help others interpret many observations already made with both earth-based and lunar orbital bistatic radar. In addition, the experiment provides data needed to interpret observations made with the lunar sounder (sec. 3.3.1.5), and the results are expected to help define the stratigraphy of the Apollo 17 landing site.

The crewmen deployed a small, low-power transmitter and laid on the surface two crossed dipole antennas that were 70 meters long tip to tip. A receiver and receiving antennas were mounted on the lunar roving vehicle. Inside the receiver, there was a tape recorder which recorded the data on magnetic tape. In addition to the surface electrical properties experiment data, information on the location of the lunar roving vehicle, obtained from the lunar roving vehicle navigation system, was also recorded on the tape.

The basic principle of the experiment is the interference of two or more waves to produce an interference pattern. Electromagnetic energy radiated from a transmitting antenna travels at different velocities through different media. Thus, distinctive patterns were recorded as the lunar roving vehicle moved along the surface. Values of the electrical properties of the subsurface material (dielectric constant and loss tangent) were obtained from analysis of the data.

Two quite different structural models of the Apollo 17 site have been developed to account for the observations. Although neither is based on rigorous theory, the experiment team believes that each is correct in the essential features. The first model, preferred by most members of

the team, is one in which the dielectric constant increases with depth from a value of 2.5 to 3 near the surface to approximately 5 at a depth of 50 to 60 meters. A discontinuity is present at 50 to 60 meters, where the dielectric constant increases to a value of 6 to 6.5. On the basis of a low value of the loss tangent, water is probably not present at the Apollo 17 site.

In the alternate structural model, the cause of the apparent change of dielectric constant with depth is assigned to a sloping interface between a thin upper layer and a thick lower layer. The upper layer is, perhaps, 20 meters thick beneath the experiment site and thins to 15 meters at station 2 (fig. 3-12). In addition, there is a hint of a discontinuity in the dielectric constant at a depth of approximately 300 meters.

Additional theoretical and scale model work is being done to determine which model is more nearly correct (ref. 3-23).

3.2.18 Lunar Neutron Probe Experiment

The lunar neutron probe experiment, one of the Apollo 17 surface experiments, was designed to measure the rates of low-energy neutron capture as a function of depth in the lunar regolith.

Various studies of the lunar samples, particularly those involving isotopic variations in gadolinium and samarium, have documented the effects of long-term exposure of lunar materials to neutrons and have shown how such data can be used to calculate regolith accumulation and mixing rates and ages for stratigraphic layers in lunar core samples. Comparison of a neutron capture product with a spallation product in lunar rocks can also be used to infer average irradiation depths that are required to obtain accurate exposure ages. In addition, the Apollo 15 orbital gamma ray experiment has detected gamma rays from neutron capture on such elements as iron and titanium, from which the relative chemical abundances of these elements could be inferred. In all these cases, the strength of the conclusions has been necessarily limited by the lack of experimental values for the relevant rates of neutron capture. The neutron probe experiment was proposed to obtain these data.

The experiment used two particle track detection systems. A cellulose triacetate plastic detector was used in conjunction with boron-10 targets to record the alpha particles emitted with the neutron capture on boron-10. For the second system, mica detectors were used to detect the fission fragments from neutron-induced fission in uranium-235 targets.

The lunar neutron probe experiment was assembled, activated, and deployed in the hole formed by the drilling and extraction of the deep-core sample. The probe was deployed during the first extravehicular activity and retrieved at the end of the third extravehicular activity for a total activated exposure period of 49 hours.

When the probe was disassembled, the targets and detectors were all in excellent condition, and indicators show that the probe temperature never exceeded 335° K. The possibility that the probe would reach higher temperatures was a serious concern before the mission, because thermal annealing of the particle tracks in the plastic could occur.

Although only the mica detectors had been analyzed at the time of publication of reference 3-24, it appears that good agreement exists between the results of the experiment and theoretical calculations of neutron capture rates and the equilibrium neutron energy spectrum. If this agreement is confirmed, interpretations of lunar sample data to determine regolith mixing rates and depths, depths of irradiation for lunar rocks, and accumulation rates and deposition times can be verified.

3.2.19 Laser Ranging Retroreflector

Arrays of optical reflectors were emplaced on the lunar surface during the Apollo 11, 14, and 15 missions. Each of the arrays consisted of a compact assembly of solid fused silica corner reflectors, 3.8 centimeters in diameter, mounted in an aluminum panel. Fused silica was used because of its known radiation resistance, thermal stability, high transparency to most wavelengths in solar radiation, long life, and operation in lunar day and lunar night. Each reflector was recessed 1.9 centimeters in the panel mounting socket to minimize temperature gradients.

Accurately timed pulses of light from a ruby laser at a ground station observatory are directed through a telescope aimed at one of the reflector packages. The light is reflected back on a path parallel to the incident beam, collected by the telescope, and detected by special receiving equipment. The time required for a pulse of light to reach the reflector and be returned is used to establish the distance from the earth ground station to the reflector site on the lunar surface at that time. Even though the illuminated spot on the moon (the reflector) is small, the fact that each corner reflector sends the light back in almost the same direction it came from causes the return signal at the earth from the reflector panel to be 10 to 100 times larger than the reflected intensity from the lunar surface.

The overall design for the Apollo 14 and 15 reflector arrays was similar to that for Apollo 11 except the half-angle taper of the reflector cavities was increased so as to increase the array optical efficiency 20 to 30 percent for off-axis earth positions. The number of reflectors in the array was increased from 100 for Apollo 11 and 14 to 300 for Apollo 15 to permit regular observations with simpler ground equipment, especially for groups mainly interested in obtaining geophysical information from observing only one reflector. The increase also allowed the use of a number of permanent stations on different continents for the determination of polar motion and earth rotation with high accuracy, as well as the use of movable lunar ranging stations to monitor movements of a large number of points on the earth's surface.

Ground stations obtaining successful measurements from the Apollo arrays include the McDonald Observatory in Texas, Air Force Cambridge Research Laboratory's Lunar Ranging Observatory in Arizona, Lick Observatory, Pic du Midi Observatory in France, Tokyo Astronomical Observatory in Japan, Crimean Astrophysical Observatory in the Soviet Union, and the Smithsonian Astrophysical Observatory.

The three Apollo reflector sites form an almost equilateral triangle with sides 1250, 1100, and 970 kilometers, and are almost centered on the near side of the moon. The complex angular motions of the moon about its center of mass thus can be separated with high accuracy from the range changes due to center-of-mass motion by differential range measurements to different reflector locations.

The accuracy already achieved in lunar laser ranging represents a hundredfold improvement over any previously available knowledge of the distance to points on the lunar surface. Extremely complex structure has been observed in the lunar rotation, and significant improvement has been achieved in the lunar orbit. The selenocentric coordinates of the retroreflectors give improved reference points for use in lunar mapping, and new information on the lunar mass distribution has been obtained.

Full use of the Apollo arrays will require an observing program continuing many years and using ground stations around the world. No evidence of degredation with time in the return signals from any of the Apollo reflectors has been observed so far, and thus an operational lifetime of at least 10 years may be expected for these passive retroflector arrays.

Further information is contained in reference 3-25.

3.2.20 Charged-Particle Lunar Environment Experiment

The charged-particle lunar environment experiment was deployed at Fra Mauro as part of the Apollo 14 experiments package system. The instrument was designed to measure the fluxes of electrons and protons with energies ranging from 40 to 70 000 electron volts and their angular distribution and time variations.

The basic instrument of the experiment consists of two detector packages (analyzers A and B) oriented in different directions for minimum exposure to the ecliptic path of the sun. Each detector package has six particle detectors; five provide information about particle energy distribution, and the sixth provides high sensitivity at low particle fluxes. Particles entering the detector package are deflected by an electrical field into one of the six detectors, depending on the energy and polarity of the particles.

On April 8, 1971, the analyzer B detector voltage failed. Subsequent playback of the data from various remote sites revealed that the anomalous condition occurred abruptly. As a result, analyzer B is not providing any scientific data. The analyzer A detector voltage decreased significantly on June 6, 1971. The charged-particle lunar environment experiment continued to operate until June 16, 1971, when, after another significant analyzer A voltage decrease, the experiment was commanded to the standby mode. Since then, the instrument has been operated under a revised procedure to avoid further degradation.

The data have application to investigations of various particle phenomena, including solar wind, the magnetosphere, and low-energy solar cosmic rays. Preliminary data analyses have shown the presence of a lunar photoelectron layer; an indication of modulation or acceleration of low-energy electrons near the moon; penetration of auroral particles to lunar distances in the magnetospheric tail; and electron fluxes in the magnetospheric tail, possibly associated with the neutral sheet (ref. 3-26).

3.2.21 Solar Wind Spectrometer Experiment

Two solar wind spectrometers were deployed and activated on the lunar surface - one during the Apollo 12 mission and the other during the Apollo 15 mission. The two instruments, separated by approximately 1100 kilometers, provided the first opportunity to measure the properties of the solar plasma simultaneously at two locations a fixed distance apart. The instruments were designed to measure the velocity, density, and angular distribution of the solar wind plasma striking the lunar surface. Thus, the interaction of the solar wind with the moon may be studied and inferences made about the physical properties of the moon, the nature of the magnetospheric tail of the earth, and general solar wind properties.

To be sensitive to solar wind plasma from any direction (above the horizon of the moon) and to ascertain its angular distribution, the solar wind spectrometer has an array of seven Faraday cups. Because the cups are identical, an isotropic flux of particles produces equal currents in each cup. For a flux that is not isotropic, analysis of the relative amounts of current in the seven collectors determines the mean direction of plasma flow and is a measure of the anisotropy.

Indications of anomalous behavior of the Apollo 12 instrument were traced to August 1971 after initial discovery in November 1971. Subsequent investigation revealed that the anomaly has occurred intermittently since June 13, 1971. The periods of abnormality always occur when the sun is between 120° and 135° from the dawn horizon, and their duration increases steadily month after month. The effect of this anomaly is simply to restrict the range of energy over which positive ions can be detected, reducing the upper limit by a factor of 2. The instrument was designed to go as high as 9600 electron volts per unit charge to accommodate the helium component of the solar wind at the highest velocities that had ever been observed. In the high-gain mode, detectable currents of hydrogen ions are never found in the two highest energy levels, and helium ions are detectable in these levels only rarely. Thus, the absence of these two levels in the high-gain mode does not seriously compromise the validity and usefulness of the data. In the low-gain mode, hydrogen ion energies still do not extend into these levels, but data on helium ions will be lost more frequently. Thus, the occurrence of this anomalous performance necessitates operation of the solar wind spectrometer in the high-gain mode if possible.

The Apollo 15 solar wind spectrometer telemetry data became invalid coincident with a central station reserve power decrease of approximately 7 watts on June 30, 1972. The power decrease indicated that the experiment which is current limited was drawing approximately 13 watts of power. During real-time support periods, the experiment was cycled from the standby mode to the operate mode, and verification that the instrument was demanding excess power from the central station was obtained. The instrument was permanently commanded off June 14, 1974.

Preliminary results from the data analyzed include indications that the solar plasma at the lunar surface is superficially indistinguishable from that at a distance from the moon, both when the moon is ahead of and behind the bow shock of the earth. No detectable plasma appears to exist in the magnetospheric tail of the earth or in the shadow of the moon (ref. 3-27).

3.2.22 Solar Wind Composition Experiment

The purpose of the solar wind composition experiment is to determine the elemental and isotopic composition of the noble gases and other selected elements in the solar wind by measurement of particle entrapment on exposed sheets of foil.

The average isotopic compositions of the solar wind are of significant importance because comparisons can be made with ancient compositions derived from solar wind gases trapped in lunar soil and rocks. Because solar activity varies with time, the isotopic abundances in the solar wind are expected to vary also. Therefore, to obtain accurate average abundances which exist during this age of the solar system, this experiment was performed numerous times, separated in time and with extended foil exposure times.

The experiment was deployed on five missions (Apollo 11, 12, 14, 15, and 16). On each mission, the experiment consisted of an aluminum foil sheet on a reel and a staff to which the foil and reel were attached. The apollo 16 experiment differed from those of the previous missions in that pieces of platinum foil were attached to the aluminum foil. This change was made to determine whether or not the platinum foil pieces could be cleaned with fluoridic acid to remove lunar dust contamination without destroying rare gas isotopes of solar wind origin up to the mass of krypton. The foil was positioned by a crewman perpendicular to the solar rays, left exposed to the solar wind, retrieved, and brought back to earth for analysis. Exposure times for each deployment were as follows.

Mission	Exposure time, hr:min
Apollo 11	01:17
Apollo 12	18:42
Apollo 14	21:00
Apollo 15	41:08
Apollo 16	45:05

The relative elemental and isotopic abundances of helium and neon measured for the Apollo 12, 14, 15, and 16 exposure times are quite similar but differ from those obtained during the Apollo 11 mission. Particularly noteworthy is the absence of any indication of electromagnetic separation effects that might have been expected at the Apollo 16 landing site because of the relatively strong local magnetic field. Weighted averages of ion abundances in the solar wind for the five foil exposure periods are given in table 3-V. The errors cited are an estimate of the uncertainty of the averages for the indicated period. The errors are based on the variability of the observed abundances obtained from the four long exposure times (ref. 3-28).

3.2.23 Suprathermal Ion Detector and Cold-Cathode Gage Experiments

The suprathermal ion detector and cold-cathode gage experiments are conveniently discussed together because the data processing system is common to both experiments and because the electronics for the cold-cathode gage are contained in the suprathermal ion detector package. These two experiments were part of the Apollo 12, 14, and 15 lunar surface experiments packages.

The suprathermal ion detector experiments measure the energy and mass spectra of positive ions near the lunar surface. A low-energy detector counts ions in the velocity range from 4×10^4 to 9.35×10^6 centimeters per second with energies from 0.2 to 48.6 electron volts, enabling the determination of the distribution of ion masses as large as 120 atomic mass units. A higher-energy detector counts ions in selected energy intervals between 1 and 3500 electron volts. The ions generated on the moon are of interest because possible sources are sporadic outgassing from volcanic or seismic activity, gases from a residual primordial atmosphere of heavy gases, and evaporation of solar wind gases accreted on the lunar surface. Ions that arrive from sources beyond the near-moon environment are also being studied. For example, the motions of ions in the magnetosphere can be investigated during those periods when the moon passes through the magnetospheric tail of the earth.

TABLE 3-V.- COMPARISON OF WEIGHTED AVERAGES OF SOLAR WIND ION ABUNDANCES[a]

[b]Sources	He^4/He^3	He^4/Ne^{20}	Ne^{20}/Ne^{22}	Ne^{22}/Ne^{21}	Ne^{20}/Ar^{36}
Solar wind (average from solar wind composition experiments)	2350 ±120	570 ±70	13.7 ±0.3	30 ±4	28 ±9
Lunar fines 10084	2550 ±250	96 ±18	12.65 ±0.2	31.0 ±1.2	7 ±2
Ilmenite from 10084	2720 ±100	218 ±8	12.85 ±0.1	31.1 ±0.8	27 ±4
Ilmenite from 12001	2700 ±80	253 ±10	12.9 ±0.1	32.0 ±0.4	27 ±5
Ilmenite from breccia 10046	3060 ±150	231 ±13	12.65 ±0.15	31.4 ±0.4	(c)
Terrestrial atmosphere	7×10^5	0.3	9.80 ±0.08	34.5 ±1.0	0.5

[a]Obtained from the solar wind composition experiments with abundances in surface-correlated gases of lunar fines and a breccia, and in the earth's atmosphere.

[b]Data for surface-correlated gases in lunar materials are from references 3-29 and 3-30.

[c]Variable.

The cold-cathode gages measure the density of neutral atoms comprising the ambient lunar atmosphere. The range of the instruments corresponds to atmospheric pressures of 10^{-12} to 10^{-6} torr. Neutral atoms entering the sensor become ionized and result in a minute current flow that is proportional to the atmospheric density. These instruments were included in the experiments packages to evaluate the amount of gas present on the lunar surface. The gage indications can be expressed as a concentration of particles per unit volume or as pressure, which depends on the ambient temperature in addition to the concentration. The amount of gas observed can be compared with the expectation associated with the solar wind source to obtain an indication of the presence of other gas sources.

The Apollo 12 suprathermal ion detector and cold-cathode gage were commanded on after experiments package deployment and functioned satisfactorily for approximately 14 hours. At that time, the 3500-volt power supply for the suprathermal ion detector and the 4500-volt power supply for the cold-cathode gage were turned off automatically. Analysis indicates that arcing resulted from the outgassing of the electronics potting material and that the arcing protection provisions turned off the power supplies.

The 4500-volt power supply was immediately commanded on several times unsuccessfully. All attempts to command the 4500-volt power supply on have been unsuccessful because of damage incurred by the arcing. After a waiting period for gases to dissipate, the 3500-volt power supply was commanded on successfully, and the Apollo 12 suprathermal ion detector has been able to function since that time.

The Apollo 14 and 15 suprathermal ion detectors have experienced numerous arcing anomalies since lunar deployment and initial activation; however, these instruments continue to function. The Apollo 14 experiment also has experienced an anomaly in the positive analog-to-digital converter, causing a loss of all engineering data processed through that converter. This anomaly has had no adverse effect on the scientific outputs of the experiments.

The suprathermal ion detectors have detected numerous single-site ion events. Multiple-site observations of ion events that possibly correlate with seismic events of an impact character (recorded at the seismic stations) have resulted in information about the apparent motions of the ion clouds. The 500- to 1000-electron-volt ions streaming down the magnetosheath have also been observed simultaneously by all three instruments (ref. 3-31).

On March 7, 1971, the Apollo 14 suprathermal ion detector recorded 14 hours of data that appears to be primarily a result of clouds of water vapor. Studies of all possible sources of such an event leads to the conclusion that the water is of lunar origin (ref. 3-32). In view of the almost total lack of water in returned samples, this is an unexpected result.

Before the Apollo program, optical and radio observations had been used to set lower limits on the density of the lunar atmosphere; apart from that, nothing was known. The Apollo program has demonstrated that the contemporary moon has a tenuous atmosphere although by earth standards the lunar atmosphere is a hard vacuum. The cold-cathode gage experiment measured the concentrations of neutral atoms at the lunar surface to be approximately 2×10^5 atoms per cubic centimeter. This measurement corresponds to a pressure between 10^{-12} and 10^{-11} torr (a vacuum not achievable in earth laboratories).

3.2.24 Cosmic Ray Detector Experiment

The relative abundances and energy spectra of heavy solar and cosmic ray particles convey much information about the sun and other galactic particle sources and about the acceleration and propagation of the particles. In particular, the lowest energy range, from a few million electron volts per nuclear mass unit (nucleon) to 1000 electron volts per nucleon (a solar wind energy), is largely unexplored. The cosmic ray experiment contained various detectors designed to examine this energy range.

The experiment was carried on the Apollo 16 and 17 missions and was the outgrowth of earlier cosmic ray experiments on the Apollo 8 and 12 missions. The early experiments consisted basically of a detector affixed to crewmen's helmets to assess the amount of cosmic ray radiation to which the crewmen were subjected in space. The purposes of and the hardware for the Apollo 16 and 17 experiments were considerably more exotic and complex.

The detection basis of nearly all the cosmic ray experiments is that particles passing through solids can form trails of damage, revealable by preferential chemical attack, which allows the particles to be counted and identified. The Apollo 16 detector hardware consisted of a foldable four-panel array (fig. 3-24). The panels were mounted on the outside of the lunar module descent stage so as to directly expose three panels to cosmic ray and solar wind particles after the spacecraft/lunar module adapter had been jettisoned. During the first extravehicular activity on the lunar surface, a crewman pulled a lanyard to expose the hidden surfaces of panel 4 to the lunar surface cosmic rays and the solar wind. Exposure ended just before the termination of the third extravehicular activity, at which time the four-panel array was pulled out of its frame and folded into a compact package for return to earth. Because the folding and stowing of the device ended the period of useful exposure of the detectors, provision was made to distinguish particles detected during the useful period from particles that subsequently penetrated the spacecraft and entered the detectors.

The full planned exposure of the four panels was not obtained on Apollo 16 because the scheduled sequence of events did not occur completely as planned.

a. Panel 4 contained a shifting mechanism that activated several experiments, most notably the neutron experiment, on the lunar surface. Because of a mistake in the final assembly, the shifting was only partially successful. This circumstance caused degradation of the information that can be obtained from the neutron experiment and made it difficult to obtain information on the time variation of light solar wind nuclei.

b. A temperature rise in the package exceeded design specifications. Although this temperature rise has rendered the anlaysis of the experiment difficult, the effects of the temperature rise can be taken into account.

c. At some time during the mission, panel 1 became covered with a thin, dull film that seriously degraded the performance of panel 1.

d. During the translunar phase of the mission on April 18, 1972, a medium-sized solar flare occurred. Detectors exposed to the solar flare showed that the flare contained approximately 10^8 protons per square centimeter with energies greater than 5 million electron volts.

The Apollo 17 hardware (fig. 3-25) consisted of a thin aluminum box with a sliding removable cover. Four particle-detector sheets were attached to the interior wall of the box, and three were attached to the inside surface of the cover. Opening was accomplished by two opposing rings, one mounted on the cover and the second mounted on the box. During the first extravehicular activity, a crewman removed the experiment from the lunar module and pulled the cover portion off the box. The cover was hung on the lunar module structure in the shade, with the detector surfaces oriented away from the sun and facing the dark sky. The open box was then hung by a Velcro strap on a lunar module strut in the sun, with the detector surfaces perpendicular to the sun. The detectors were exposed to the lunar environment for 45-1/2 hours. The experiment was retrieved at the beginning of the third extravehicular activity, earlier than planned, because of an apparent increase in the flux of low-energy particles caused by a visually active sunspot that was present during the entire mission.

Three teams of investigators are using data from the cosmic ray detector experiment. The preliminary findings from the Apollo 16 data are given in reference 3-33. Included are the observations that the differential energy spectrum of nuclei with $Z > 6$ falls by seven orders of magnitude over the interval from 0.1 to 20 million electron volts per nucleon, then remains almost flat up to approximately 100 million electron volts per nucleon. The two parts correspond to contributions from the sun and from galactic cosmic rays.

3.2.25 Lunar Ejecta and Meteorites Experiment

This experiment, emplaced on the lunar surface during the Apollo 17 mission, measures impacts of primary cosmic dust particles (10^{-9} grams or less) and lunar ejecta emanating from the sites of meteorite impacts on the moon. Specific objectives are to (1) determine the background and long-term variations in cosmic dust influx rates, (2) determine the extent and nature of lunar ejecta produced by meteorite impacts on the lunar surface, and (3) determine the relative contributions of comets and asteroids to earth meteoroids.

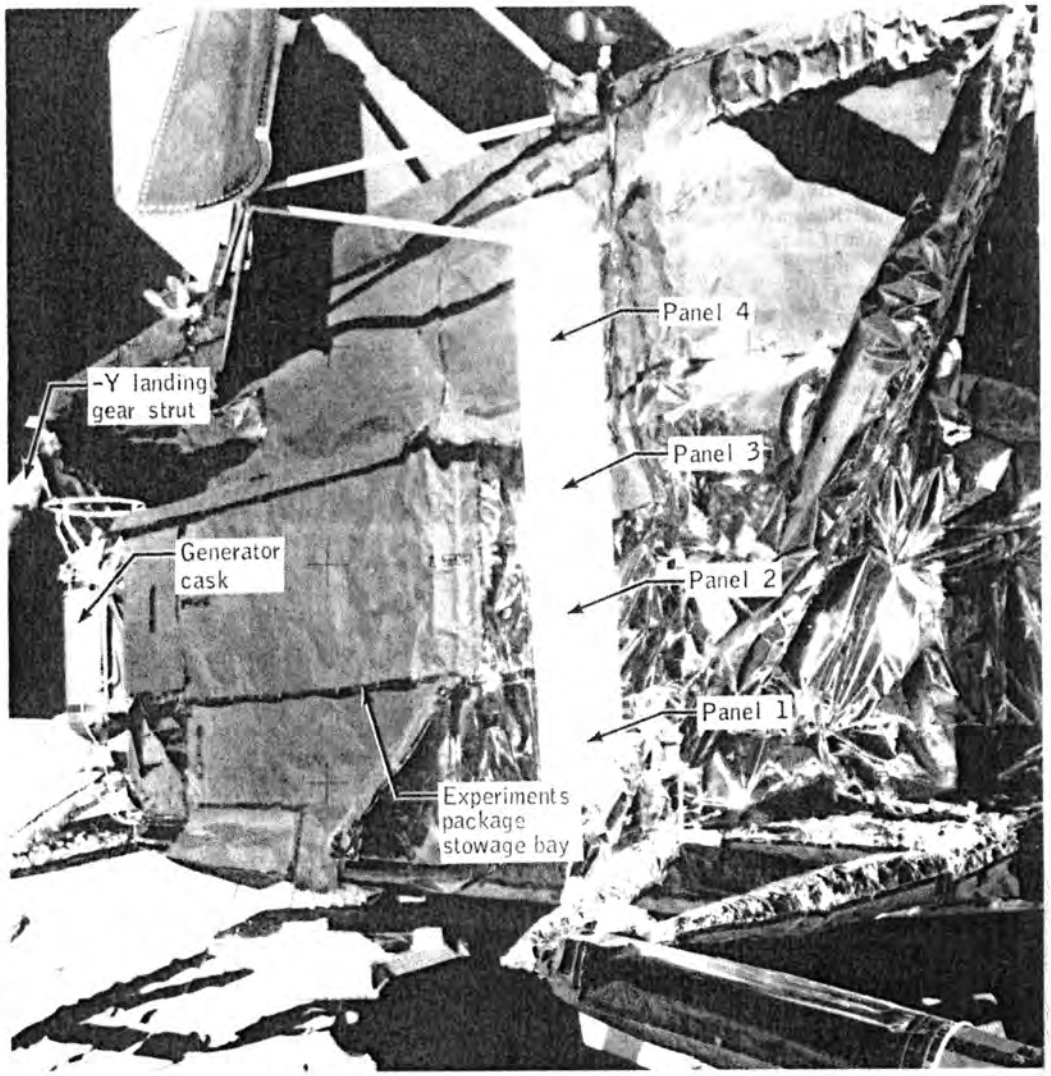

Figure 3-24.- Cosmic ray detector experiment.

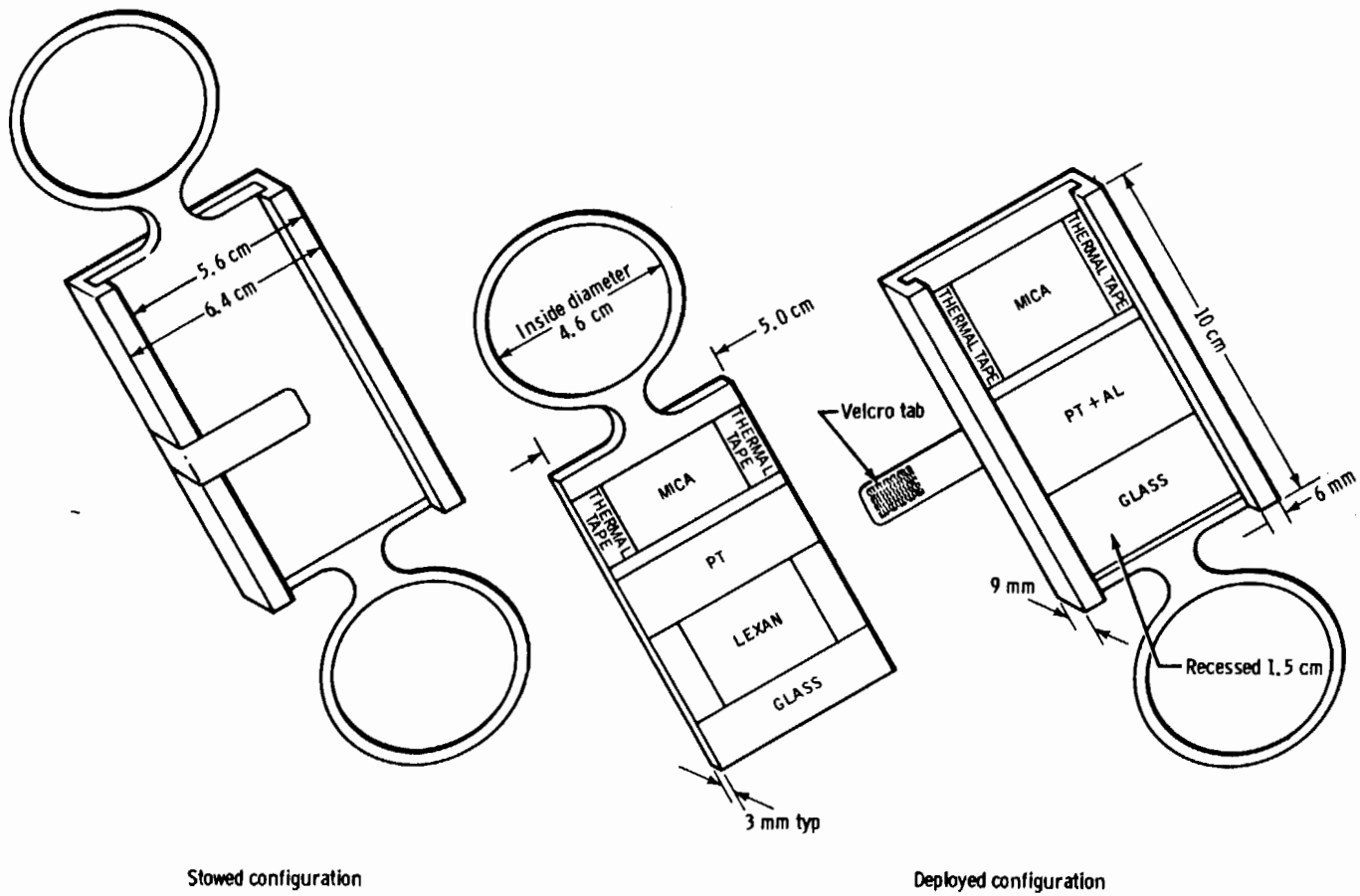

Figure 3-25. - Apollo 17 cosmic ray detector.

ORIGINAL PAGE IS
OF POOR QUALITY

The experiment consists of an array of sensors that detect micrometeorites and yeild data throughout the lifetime of the Apollo 17 lunar surface experiments package. The following particle parameters can be derived.

a. Speed (within ±5 percent): 1 to 75 kilometers per second range

b. Kinetic energy for particles having energies of 1 to 1000 ergs

c. Flight path (within ±26°)

d. Particle momentum: 2.5×10^{-5} to 7×10^{-4} dyne-seconds

e. Mass and diameter for assumed particle densities

The thermal control provisions for the lunar ejecta and meteorites experiment do not maintain the operating temperature below the qualification test maximum level during the lunar day because the thermal conditions at the Apollo 17 site are different than those of the design site (level plain at equator). However, the current thermal profile permits experiment operation during 100 percent of each lunar night and approximately 30 percent of each lunar day. Since the experiment components are rated higher than the maximum qualification test temperature, the allowable maximum temperature of operation has been increased in small increments each lunation.

Meaningful results from the experiment can only be derived from a long-term statistical and correlative study between primary particle events and ejecta events. In view of the relatively short-term measurement of primary particles as of the time of publication of reference 3-34, no results were reported.

3.2.26 Lunar Atmospheric Composition Experiment

The lunar atmospheric composition experiment is a three-channel, magnetic-deflection-type mass spectrometer. The spectrometer was deployed as part of the Apollo 17 lunar surface experiments package. The purposes of the experiment are to obtain data on the composition of the lunar ambient atmosphere in the mass range of 1 to 110 atomic mass units and to detect transient changes in composition caused by the venting of gases from the lunar surface or other sources.

This experiment augments data from the lunar orbital mass spectrometer experiments conducted during the Apollo 15 and 16 missions, and the far ultraviolet spectrometer experiment of Apollo 17.

From the data obtained during the first three lunations after deployment of the lunar atmospheric composition experiment instrument, three gases - helium, neon, and argon - have been identified as being native to the lunar atmosphere. A summary of the measured concentrations of these gases compared with several predictions is presented in table 3-VI. The helium concentrations and the diurnal ratio are in excellent agreement with predictions based on the solar wind as a source, indicating that the basic tenets of the theory of a noncondensable gas are correct. However, the neon measured concentration is a factor of 20 below predictions, indicating possibly some adsorption or retention on the night side of the moon. If true, this phenomenon is unexpected because of the very low freezing temperature (27° K) of neon. The Apollo 16 lunar orbital mass spectrometer experiment did detect neon on the night side near the sunset terminator at a concentration approximately 1×10^5 molecules per cubic centimeter. This is approximately a factor of less than 2 higher than the present value and is within the experimental errors of the measurements. This discrepancy between theory and measurement for neon is a serious problem and is one of the major tasks to be considered in the future.

Argon appears to be adsorbed on the late night (coldest) part of the lunar surface as none of its isotopes are detected at this time. A significant predawn enhancement of argon-40 indicates a release of the gas from the warm approaching terminator region. The total nighttime gas density of 4.6×10^5 molecules per cubic centimeter is a factor of 2 higher than the measured values from the Apollo 14 and 15 cold cathode gage experiments. This is not surprising (notwithstanding errors in calibration of both instruments) because the mass spectrometer ion source is warmer than the cold discharge source of the gage and therefore would have a higher outgassing rate. However, the residual being measured by both instruments is clearly not entirely neon but a multitude of gases, including helium (ref. 3-36).

ORIGINAL PAGE IS
OF POOR QUALITY

TABLE 3-VI.- CONCENTRATIONS OF GASES DETERMINED FROM CURRENT LUNAR MASS SPECTROMETER DATA, COLD CATHODE GAGE DATA, AND PREDICTIONS

Gas	Mass spectrometer data, molecules/cm^3		Cold cathode gage data, molecules/cm^3		Predicted data, molecules/cm^3	
	Day	Night	Day	Night	Day	Night
Hydrogen	1×10^8	1×10^5			[a]3.6×10^3	[a]2.3×10^4
Helium	2×10^3	4×10^4			[b]3×10^3 [a]1.7×10^3	[a]4.1×10^4
Neon		[c]7×10^4			[b]5×10^4	[b]1.3×10^6
Argon-36		[c]2×10^3			[b]3×10^2	[b]8×10^3
Argon-40		[c]2×10^3				
[d]Total	4×10^8	4.6×10^5	1×10^7	2×10^5		

[a]Predicted by R. R. Hodges, Jr., in unpublished data.

[b]Reference 3-35.

[c]Upper limit; argon freezes out at night.

[d]Total gas concentrations from mass spectrometer during second lunar day and third lunar night after deployment; from cold cathode gage after 10 lunations.

The multiplier high voltage power supply of the instrument apparently failed on October 17, 1973, resulting in the loss of science data. Periodic checks are being made to assess the performance of the instrument, but no significant improvement has been obtained since that date.

3.2.27 Lunar Dust Detector

Dust detectors were included with the Apollo 11, 12, 14, and 15 experiment complements. The detectors were mounted on the Apollo lunar surface experiments package sunshields. The Apollo 11, 14, and 15 detectors were designed to obtain data for assessing dust accretion, lunar radiation, and lunar surface brightness temperature. The Apollo 12 detector was designed only for assessing dust accretion and measuring thermal surface degradation.

All dust detectors have shown no measurable dust degradation effects caused by lunar module lift-off debris. A cell degradation rate of from 3 to 4 percent per year has been measured for the solar cells having 0.006-inch protective glass covers and about 7 to 8 percent per year for unprotected cells. These degradation rates are very close to the expected cell damage during a year due to the high energy cosmic and solar radiation received at the lunar surface. Most of the degradation of the cells can therefore be attributed to radiation since a dust accretion process would cause both bare and cover-glass-protected cells to decay at the same rates.

Yearly cyclic variations in the cell temperature of as much as 6° K have been measured. These variations are due to the difference in distance from the sun during the lunar "winter" aphelion (July) and lunar "summer" perihelion (December). Similarly, the cell output voltages show a yearly cyclic variation of approximately 8 percent because of the difference in received solar radiation through the year.

3.2.28 Surveyor III Analysis

Several pieces of hardware were removed from the Surveyor III spacecraft by the Apollo 12 astronauts and returned to earth for analysis. The Surveyor III spacecraft had landed on the lunar surface in the Ocean of Storms 2 1/2 years earlier and had been exposed to the lunar particle environment during that time.

Traces of induced radioactivity and meteoroid impact craters ranging from 0.025 to 0.25 millimeter in diameter were found in the recovered Surveyor hardware. Crater sizes and the indicated flux were compatible with predicted values.

An unexpected discovery in the study of solar flare particles occurred when the relative abundances of very heavy nuclei were determined from a sample of Surveyor III glass. The discovery (now confirmed by independent satellite measurements) was that the lowest energy solar cosmic rays are highly enriched in very heavy nuclei compared to normal solar material. This discovery is the first demonstration of the preferential heavy-ion acceleration by a natural particle accelerator. This discovery also casts an entirely new light on two decades of solar and cosmic ray research during which a basic assumption has been the absence of such preferential acceleration processes.

3.2.29 Particle Implantation Studies

The flux of particle fields and solar radiation and of meteorites on the lunar surface has left evidence of the history of the solar system implanted on the surface materials.

a. Solar wind particles: Although the solar wind has been studied for years using unmanned satellites, the Apollo program has contributed the following important new information.

1. From solar wind ions captured in aluminum foils and subsequently analyzed in the laboratory (sec. 3.2.22), isotopic information on heavy rare gases has been obtained for the first time. This information is fundamental to the understanding of the evolution of the earth atmosphere.

2. Lunar samples give a wealth of information about directly implanted atoms originating from the sun. This information is basic to an understanding of the sun and all other solar system objects. The elements krypton and xenon show isotopic differences, still unexplained, between the earth atmosphere and meteorites. Therefore, studies of surface implanted ions of krypton and xenon have been particularly important. Deuterium has been shown to have a very low abundance with respect to hydrogen abundance.

3. The abundance of argon-40 is greatly in excess of what was expected; the most likely interpretation is that the argon-40 was originally emitted by the moon and was then reimplanted by interaction with the solar wind.

4. Amorphous surface films, very likely produced by solar wind bombardment, are observed on many lunar grains. Artificial irradiation produced similar films, the thicknesses of which vary with bombarding energy. These observations indicate that the lunar soil will be useful in studying the ancient solar wind and its energy fluctuations.

5. The concentrations of hydrocarbons (mainly methane and ethane) correlate with the solar wind irradiation of different lunar soils. These compounds are possibly formed in the superficial layers of individual dust grains that have been heavily irradiated with solar wind ions. Since interstellar space contains both dust clouds and sources of energetic particles, these processes may be important for organic synthesis in the galaxy as a whole. Some effects may also be due to local melting resulting from meteorite impacts and subsequent redeposition.

6. Related studies in lunar soils on the light, stable isotopes of carbon, nitrogen, oxygen, silicon, and sulphur show significant departures from terrestrial and meteoritic values; values are also different from those of the lunar basalts themselves and are apparently produced by the unique irradiation and bombardment history of the soil. Nitrides, cyanide, and phosphides, as well as benzene, also are present, and their production may be due to similar processes.

b. Solar-flare particles: For the first time, information about the solar-flare activity on the sun over geologic times has been obtained. This information is contained in the induced radioactivities and nuclear-particle tracks produced in the outer layers of lunar surface material. One important conclusion is that the average solar-flare activity has not changed appreciably over the past few million years. It has also been shown that solar flares were active at least 0.5 billion years ago and probably date back to the original formation of the lunar surface. The observed constancy of solar flares suggests that major climatic changes during the last million years have not been associated with large-scale changes in solar activity as had previously been postulated.

3.2.30 Long-Term Lunar Surface Exposure

Selected hardware was photographically documented and left on the moon during the Apollo 17 mission. Samples of similar material were set aside for long-term storage on earth. The purpose is to allow comparison of the materials at some future time. The long-term effect of the lunar environment on the materials thus can be evaluated if the Apollo 17 lunar site is revisited.

3.2.31 Far-Ultraviolet Camera/Spectrograph

A far-ultraviolet camera/spectrograph experiment (fig. 3-26) was operated on the lunar surface during the Apollo 16 mission. Among the data obtained were images and spectra of the terrestrial atmosphere and geocorona in the wavelength range below 1600 angstroms. These data gave the spatial distributions and relative intensities of emissions due to atomic hydrogen, atomic oxygen, molecular nitrogen, and other elements - some observed spectrographically for the first time. A more detailed account of the findings of this experiment can be found in reference 3-37.

Figure 3-26.- Far ultraviolet camera/spectrograph experiment.

3.3 LUNAR ORBITAL SCIENCE

The results of scientific experiments and detailed objectives performed while in lunar orbit and, in some cases, during flight to and from the moon are summarized in this section. Table 3-VII lists these experiments and objectives and identifies the missions to which they were assigned. Many of the experiments complement each other, and some complement experiments placed on the lunar surface or flown on other programs. Some also support more than one science discipline.

Through the Apollo 14 mission, the science-related activities were limited almost entirely to those that could be accomplished through crew photography or visual observations, to lunar surface experiments, and to ground-based investigations that utilized spacecraft systems. The principal portion of the lunar orbital science program was accomplished on the final three (J-series) missions. A scientific instrument module was installed in a section of the service module as shown in figures 3-27 and 3-28.

As described in paragraph 4.4.4.6, mechanical deployment devices were developed for the Apollo 15, 16, and 17 scientific instrument modules so that certain instruments could be moved away from X-ray secondary radiation and the contamination cloud that surrounded the spacecraft, or so that the desired photographic angles could be obtained. These devices and the instruments themselves were remotely controlled by the crew from the command module. In addition, provisions were made for the Apollo 15 and 16 crews to launch particles-and-fields subsatellites into lunar orbit by means of remotely controlled deployment mechanisms located in the scientific instrument module bays (fig. 3-29). The subsatellites contained charged particle detectors, a biaxial fluxgate magnetometer, an optical solar aspect system (for attitude determination), a data storage unit, a power system, a command decoder, and an S-band communications system.

Experiment design and allocation were constrained by the usual spacecraft limitations of weight, volume, and power. The total weight of the scientific instrument module experiments was limited to approximately 700 pounds per mission. In addition, there were other constraints and requirements that were unique to these instruments. For example, individual, deployable covers were required for most of the instruments to protect them from the effects of service module reaction control system plume heating and contamination and from possible contamination from spacecraft effluents (waste water dumps, urine dumps, and fuel cell purges). During the missions, when these protective covers were open for data acquisition, it was necessary to inhibit the firing of four of the reaction control system thrusters - the two that fired across the scientific instrument module bay and the two that fired downward, alongside the scientific instrument module bay. Additionally, whenever the covers were open, the spacecraft attitude had to be constrained to prevent entrance of direct sunlight into several of the instruments' fields of view; otherwise, data degradation or permanent instrument damage would have occurred. Until several hours prior to lunar orbit insertion, the instruments were protected by a panel that enclosed the entire scientific module bay. This panel was cut and jettisoned by pyrotechnic devices.

About 30 000 photographs of the lunar surface were obtained from lunar orbit on the Apollo missions. Approximately 15 000 of these were taken by hand-held 70-millimeter electric cameras during Apollo missions 8 through 17; 10 000 by mapping cameras during the Apollo 15, 16, and 17 missions; and 5000 by panoramic cameras during the Apollo 15, 16, and 17 missions. Only a fraction of the large number of photographs obtained have been studied in detail. Most of the completed analyses have been used to support mission operations and science objectives of many experiments and detailed objectives.

3.3.1 Bistatic Radar

The bistatic radar experiment was conducted on the Apollo 14, 15, and 16 missions, and utilized existing command and service module S-band and VHF radio communication systems. Its purpose was to determine the principal electromagnetic and structural properties of the lunar surface from observations of S-band and VHF signals which were transmitted from the command and service module in lunar orbit, reflected from the moon, and monitored on earth. The S-band (13-centimeter-wavelength) transmissions were received by the 64-meter-diameter antenna located at Goldstone, California, and the VHF (116-centimeter-wavelength) transmissions by the 46-meter-diameter antenna erected on the Stanford University campus at Palo Alto, California.