TABLE 4-V.- SUMMARY OF MAJOR CHANGES TO LUNAR MODULE - Continued

Function/System	Changes
Changes Implemented for Apollo 11 Through Apollo 14 Missions - Concluded (LM-5 Through LM-8)	
Reaction control	Regulator pressure upper warning limit increased from 205 to 218 psia.
Descent propulsion	Bypass line added around fuel/helium heat exchanger for pressure equalization in case of heat exchanger freezeup. Anti-slosh baffles added to descent propulsion tanks; propellant quantity gaging system modified to increase accuracy at low levels. In-line orifice added to lunar dump valve system and installation of valve assembly reversed.
Ascent propulsion	Lightweight thrust chamber incorporated in engine assembly. O-ring added to flanged joints between feed lines and fill and drain lines; Teflon used on oxidizer side and butyl rubber on fuel side.
Environmental control:	
Atmospheric revitalization section	Suit water cooling assembly added. Cabin temperature valve, regenerative heat exchanger and cabin air recirculation assembly deleted. Accumulator quantity indicator in suit cooling assembly modified. Carbon dioxide sensor line relocated upstream of suit fans.
Pressurization	Water and oxygen quick disconnects changed to allow 5-degree misalignment. Descent stage high pressure oxygen regulator pressure increased from 950 to 990 psig.
Water management	Redundant water regulator added in secondary coolant loop. Spool in water tank select valve redesigned. Backup measurement added for descent stage water tank pressure.
Thermal control, active	Muffler added to water/glycol pump outlet.

TABLE 4-V.- SUMMARY OF MAJOR CHANGES TO LUNAR MODULE - Continued

Function/System	Changes
Changes Implemented for Apollo 15 Through Apollo 17 Missions (LM-10 Through LM-12)	
Structures	Lower midsection and lower left and right side consoles of ascent stage modified to carry an additional 40 pounds of lunar samples at each location. Descent stage modified to accept larger propellant tanks, one additional oxygen tank and one additional water tank. Quadrant I modified to accept lunar roving vehicle. Quadrant III modified to accept lunar roving vehicle tool pallet. Descent stage batteries relocated to rear outrigger. Size of modular equipment stowage assembly increased.
Electrical power	Fifth battery added to descent stage. Battery relay control assembly added. Capacity of descent batteries increased from 400 to 415 ampere-hours.
Displays and controls	Caution and warning modified to prevent spurious signals. Guards added over several displays and meters to prevent glass breakage from internal pressure.
Reaction control	Engine isolation valves deleted.
Descent propulsion	Capability added for 1200 pounds of additional propellant. Thrust chamber changed from ablative silicone to ablative quartz. Ten-inch nozzle extension added. Propellant tank balance lines deleted and trim orifices added. Oxidizer lunar dump valve changed to fuel type.

TABLE 4-V.- SUMMARY OF MAJOR CHANGES TO LUNAR MODULE - Concluded

Function/System	Changes
Changes Implemented for Apollo 15 Through Apollo 17 Missions - Concluded (LM-10 Through LM-12)	
Environmental control	Additional lithium hydroxide canisters provided for extended stay. One descent stage oxygen tank added and portable life support system fill pressure increased to approximately 1400 psi. One descent stage water tank added.
Thermal control, active	Heaters added to modular equipment stowage assembly. Manual shutoff valve added to descent stage coolant loop to allow increased battery operating temperatures.

4.5.4.2 Extended-Stay Lunar Modules The Apollo 15 through Apollo 17 mission lunar modules were modified to support the program requirements for greater science payload and a longer stay time, and to carry a lunar roving vehicle for lunar surface exploration. These vehicle changes are also shown in table 4-V.

4.6 LUNAR MODULE SYSTEMS DEVELOPMENT AND PERFORMANCE

4.6.1 Introduction

Significant aspects of the development and flight performance of the lunar module systems are presented in this section. Brief systems descriptions are given where necessary but are not generally included. Complete descriptions of the lunar module systems are given in references 4-15 through 4-23 and 4-45. The topics discussed in this section have, in many cases, been discussed in more depth in individual Apollo Experience Reports. These and other documents are referenced where appropriate.

4.6.2 Structures

The structure of the lunar module was designed and manufactured to keep weight at a minimum. The design certification depended primarily on the ground test program. Formal analyses were made to supplement the test program and to serve as a baseline for each mission. Testing at the component level was conducted when it was impractical to impose the required environment at the vehicle level.

Significant problem areas encountered were shear panel fatigue, panel thickness control, stress-corrosion cracking, machined strut tolerances, and interchangeable parts similar in appearance but structurally different.

4.6.2.1 Shear panel fatigue and thickness control.- The descent stage primary structure was made up mainly of shear panels (fig. 4-19) that were designed as diagonal tension field beams. Under load, this type of beam developed the required strength after the shear web had developed buckles. The shear panel webs were chemically milled to provide a minimum-weight structure. The minimum thickness of the original panels was 0.006 inch with a tolerance of ±0.002 inch. During dynamic testing, fatigue cracks (fig. 4-19) were noticed at the transition zone between the shear web and the peripheral rivet land. The diagonal tension buckles in the shear web terminated at the rivet land with a small radius of curvature that resulted in a region of stress concentration. The dynamic test data indicated that the buckles oscillated in the plane of the web. Under static load, the stresses induced in the panel were not excessive; however, the dynamic test environment caused high-stress low-cycle fatigue at the web/land intersection. As an interim modification on the early vehicles, a fiberglass frame was applied around the periphery of each panel of the shear panel as shown in figure 4-19. Because the fiberglass modification was heavy, all shear panels in the descent stage were later redesigned to reduce weight.

While a solution to the shear web fatigue problem was being developed, the thickness of the chemically milled webs was found to be under tolerance, and small holes were discovered in some of the webs. These defects were attributed to inadequate control of the original sheet thickness and the fact that the variation in thickness was duplicated by the chemical milling process. This problem was solved by more rigorous selection of the original sheet material and by closer final inspections.

4.6.2.2 Stress corrosion.- In November 1967, while the LTA-3 aft equipment rack support struts were being load-calibrated for static tests, cracks were discovered on the ends of the struts where the end fittings were mechanically attached. Investigation of all struts revealed 23 cracked struts in 264 parts inspected. These failures were attributed to stress corrosion caused by the stresses induced when the end fittings were clamped. The large number of failures precipitated a review of the entire structure for parts susceptible to stress corrosion in January 1968. As a result of the review, all aluminum fittings susceptible to stress corrosion were identified and inspected, the heat treatment was changed from 7075-T6 to 7075-T73, required shims were provided, and protective paint was added to susceptible fittings on all unassembled vehicles. During the inspections, many stress corrosion cracks were found, which indicated that the problem was chronic throughout the structure. In december 1968, an additional review was conducted to determine which stress-corrosion-sensitive fittings were structurally critical; that is, which

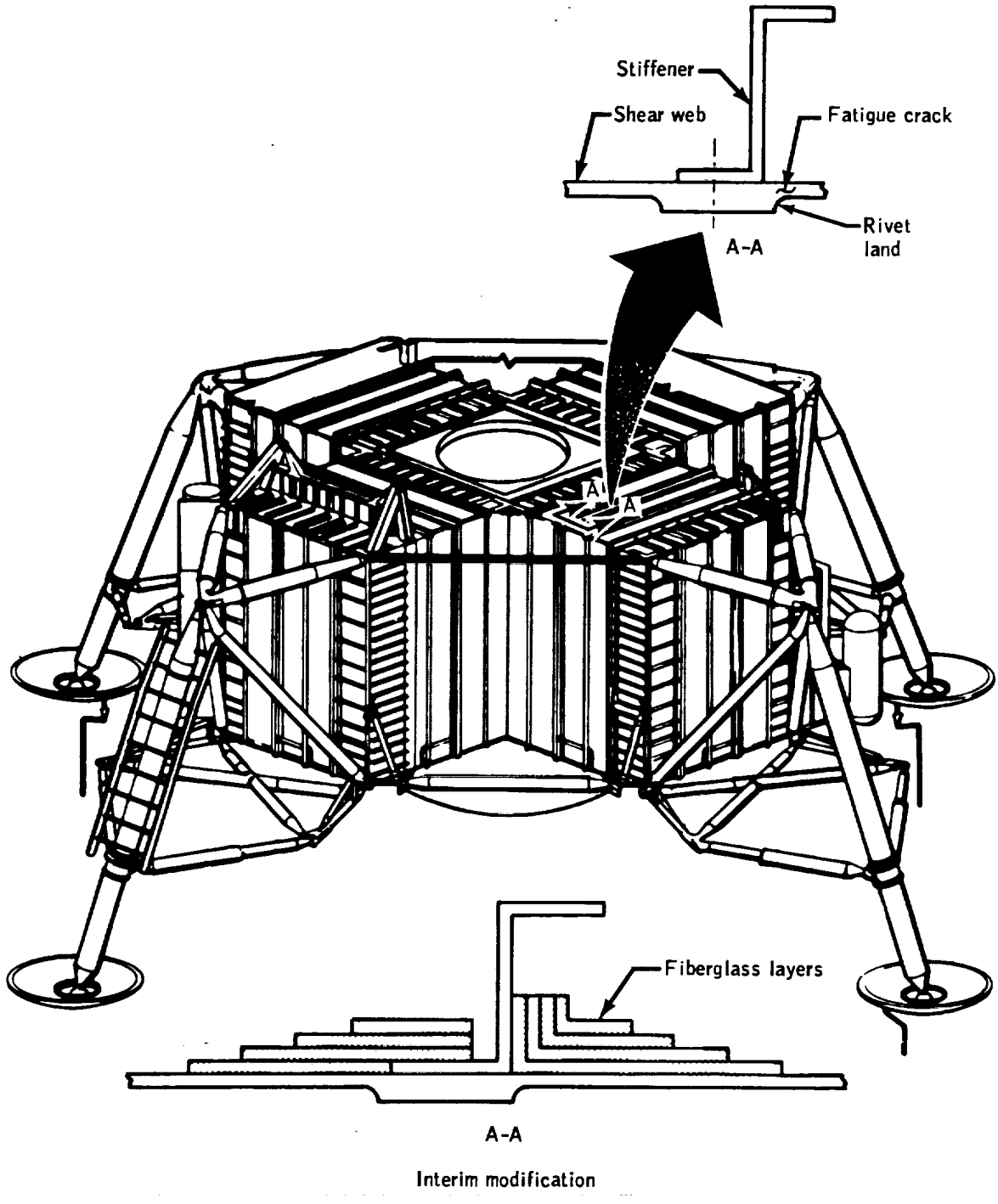

Figure 4-19.- Lunar module desent stage structure.

part, if cracked in the predicted location, would not meet the required factor of safety. Approximately 40 critical fittings were identified and were re-heat-treated, redesigned, or modified. Also, liquid shimming was used to guarantee a perfect match between the critical parts and to prevent any potential stress corrosion cracking from clamp-on stresses. Additional information on the problem of stress-corrosion cracking may be found in section 4.7 and in reference 4-59.

4.6.2.3 Internally machined struts.- Sixteen outrigger struts (four per beam) provided the support for the lunar module in the lunar module adapter and for the primary landing gear struts (fig. 4-19). The lower outrigger struts were straight tubular members approximately 53 inches in length and 3.5 inches in diameter. Each strut had a wall thickness of 0.039 inch and had closed, integral, tapered end fittings. The struts were machined from bar stock and had to be blind-machined over the entire length with a varying internal diameter.

During the static structural test to verify structural adequacy of the descent stage for the Apollo 15 lunar module and those of subsequent lunar modules, a lower outrigger strut failed because an erroneously machined groove on the internal diameter was not discovered by inspection. The groove was located at the transition from the tube to the end fitting. The inspection method used at that time consisted of a spot check of the wall thickness. This method detected overall discrepancies but was not capable of detecting local defects such as grooves. The inspection methods were improved and approximately 25 structural parts with manufacturing defects were found.

4.6.2.4 Parts interchangeability.- During the inspection of the internally machined struts, parts similar in appearance but structurally different were found to have been interchanged on the vehicles. Because of the emphasis on lunar module weight reduction, many parts were identical except for a difference in thickness of a few thousandths of an inch. The entire structure was reviewed and approximately 2700 parts were identified that could possibly be interchanged. Each part was reviewed structurally to determine whether the required factor of safety would be maintained if the part were interchanged. Approximately 260 parts were identified that would not provide adequate strength. These parts were inspected on all vehicles to verify that each part was installed in its proper location.

4.6.2.5 Flight performance.- The adequacy of the lunar module structure to meet the conditions of the design environment was verified on 12 Apollo missions. These missions included two developmental flights in which test articles were flown (Apollo 4 and 6), one unmanned lunar module flight (Apollo 5), and nine manned flights (Apollo 9 through 17). No problems associated with the primary lunar module structure occurred. However, there were several secondary structure anomalies. These anomalies and the corrective actions taken are summarized in reference 4-60 and are reflected in appendix F.

4.6.3 Thermal Control System

The basic thermal control philosophy was to make the lunar module a spaceborne thermos bottle; that is, to isolate the interior structure and equipment from the external environment so that it would remain within acceptable temperature limits without the need of any power or moving mechanical devices such as heaters or louvers. Multilayer insulation blankets and external thermal control coatings were used to isolate structure and components from the space environment and to minimize the average internal temperature change.

To realize the maximum benefits from isolation, internal temperature gradients had to be reduced. Many components within the cabin dissipated heat and were not actively cooled. To prevent overheating of these components, high-emittance coatings were used over large portions of the cabin interior to distribute the heat more uniformly. The thermal mass of water and propellant tanks was very high in relation to the heat rejection capability. For this reason, tank temperatures did not change as rapidly or as extensively as those of the structure. Moreover, the acceptable operating range was also more restrictive and great care was used in selecting tank coatings. Moderately low-emittance coatings ($\varepsilon = 0.20$ to 0.30) on the tank yielded good results. Thus, the tanks radiated part of the heat stored in them to the structure and part to the components to compensate for heat loss through the insulation blanket, while still providing acceptable propellant and water temperature. The performance of the multilayer insulation blankets (thin sheets of plastic coated on one side with a microscopic layer of aluminum) was therefore extremely critical.

Although multilayer insulation had been used on small pieces of equipment, none had been used on a vehicle the size of the lunar module and under conditions requiring such a high level of effectiveness. The role of the insulation was to prevent heat transfer into or out of the vehicle by thermal radiation. The aluminized sheets were to serve as multiple radiation shields and, as such, should not contact each other. Therefore, means of fastening the sheets to the structure without compacting them had to be devised. An additional problem was that any gases trapped between the layers would expand in the vacuum of space and cause the sheets to balloon. The multilayer insulation blankets were vented to space in order to reduce blanket internal pressure, which was necessary for an extremely effective insulation system.

An extensive fastening and venting test development effort not only yielded a lunar module thermally similar to a thermos bottle (the lunar module average temperature decreased from 70° F to 65° F during the translunar coast period) but greatly advanced the knowledge of insulation manufacturing and application for nonaerospace usage. Aluminum-coated Kapton used for the multilayer insulation blankets had previously been available only in 1-inch-wide strips similar to everyday plastic adhesive tape; now this material can be obtained in continuous sheets 5 feet or more in width. Thermal control coatings previously available only in laboratory specimen sizes can now be found in gallon quantities.

4.6.4 Landing Gear

The landing of the lunar module on the surface of the moon was one of the crucial events of an Apollo mission. During touchdown, the lunar module landing gear brought the vehicle to rest, prevented toppling, absorbed the landing impact energy, and limited the loads on the lunar module structure.

A landing gear assembly, in the deployed position, is shown in figure 4-20. Energy absorption capability was provided by honeycomb cartridges in the single primary and two secondary struts. The deployment truss served as a structural-mechanical assembly between the landing gear struts and the descent stage structure. Each landing gear leg was retained in the stowed position by a pyrotechnic uplock device. When the device was fired, a titanium strap attached to the primary strut and descent stage was severed, thus allowing the landing gear to be deployed and locked by mechanisms on each side of the landing gear assembly.

The primary strut, shown in figure 4-20 was attached to the lunar module descent stage outrigger assembly and consisted of a lower inner cylinder that fitted into an upper outer cylinder to provide compression stroking at touchdown. The footpad, which was attached to the lower end of the inner cylinder by a ball joint fitting, was approximately 3 feet in diameter and was designed to support the lunar module with a surface bearing strength of 1.0 pound per square inch as well as to maintain sliding capability after having impacted rocks or ledges during touchdown. Attached to each of three of the footpads was a 68-inch probe designed to sense lunar surface proximity and to signal the Lunar Module Pilot so that he could initiate descent engine shutdown. The secondary struts (fig. 4-20) also had an inner and an outer cylinder and were capable of both tension and compression stroking.

During ground tests, the landing gear was exposed to all significant flight environments, including vehicle drop tests under simulated lunar gravity conditions. The landing gear touchdown performance results may be summarized by considering two of the more important parameters: touchdown velocities and surface slope at the touchdown point. In all cases, the touchdown velocities were within design limits, averaging approximately 3.5 feet per second vertical velocity and approximately 2.0 feet per second horizontal velocity. Specification touchdown velocities were as high as 10 feet per second vertical and 4 feet per second horizontal. Generally, the landings occurred on low slopes, averaging approximately 5 to 6 degrees. The steepest touchdown slope of 11 degrees occurred on Apollo 15.

Gear stroking in all landings was minimal. The lunar soil absorbed an estimated 60 percent of the touchdown energy through footpad penetration and sliding, resulting in secondary strut tension stroking of about 4 inches. A small amount of primary strut stroking occurred in some instances.

The performance of the landing gear was satisfactory and met the design requirements. Details of the landing gear performance may be found in reference 4-61.

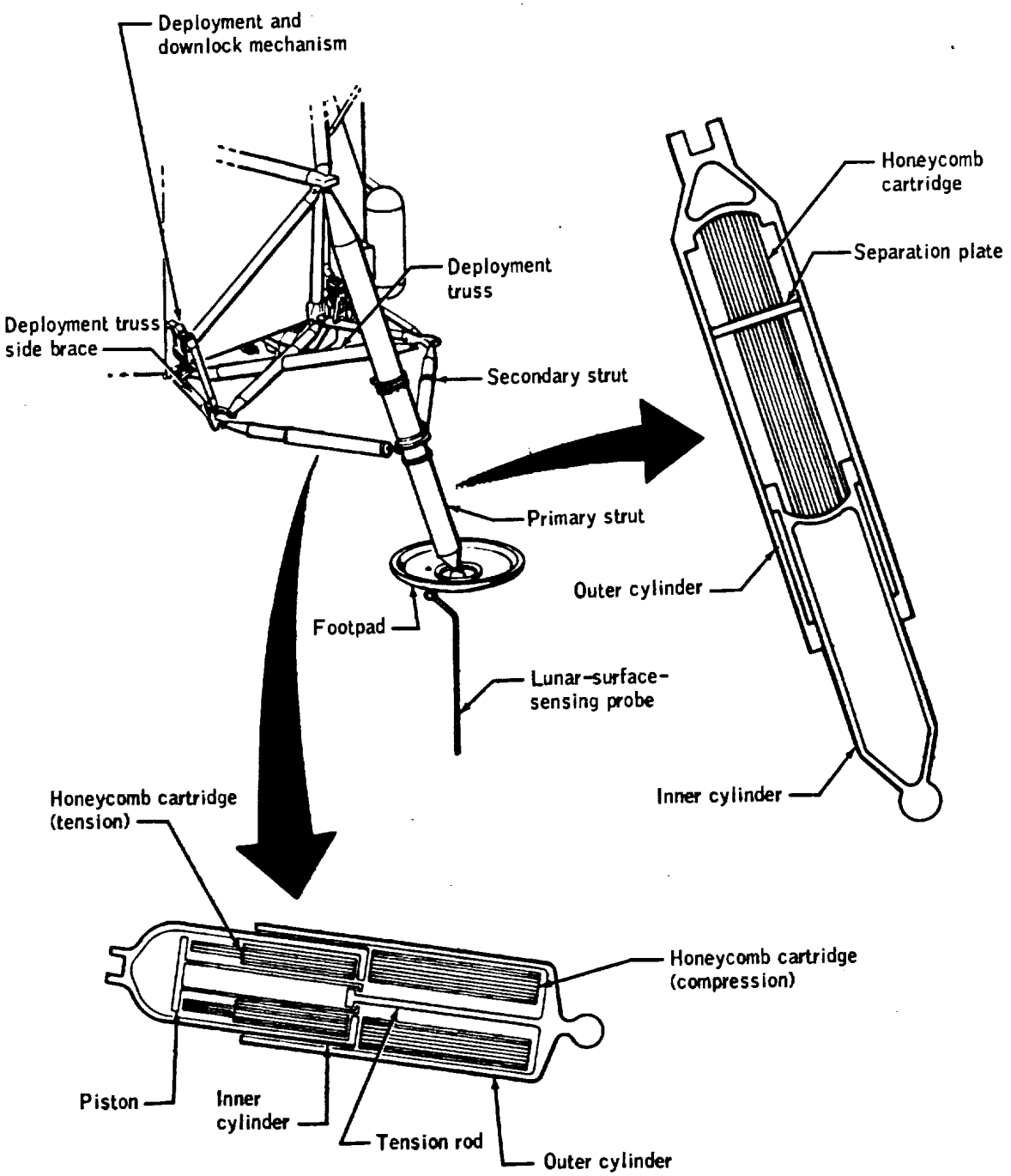

Figure 4-20.- Landing gear.

4.6.5 Electrical Power System

4.6.5.1 Batteries.- The basic lunar module primary power requirements through Apollo 14 were met by two ascent batteries rated at 296 ampere-hours each and by four descent batteries rated at 400 ampere-hours each. With the increased lunar stay time requirements of Apollo missions 15 through 17, the descent stage batteries were redesigned to deliver 415 ampere-hours each and five batteries were installed. Both the ascent and descent batteries were delivered dry and fully charged. They were activated at the launch site by adding potassium hydroxide electrolyte just prior to installation into the spacecraft.

Each ascent battery weighed 124 pounds and was approximately 5 by 8 by 36 inches. The two batteries normally provided power for lunar lift-off and power for rendezvous and docking with the command and service module. If necessary, they also could have provided on-line support of the descent batteries in the event of an abort during lunar descent. In case one ascent battery had failed, the other could have provided sufficient power to accomplish safe rendezvous and docking.

Each descent battery weighed 133 pounds and was approximately 9 by 10 by 17 inches. The descent batteries provided small heater loads early in the mission, lunar descent power, and lunar surface stay power. In terms of total energy requirements for both the four- and five-battery-configuration missions, there was an energy margin of approximately one battery; however, in terms of the rate of energy withdrawal, one battery could, under emergency conditions, meet the entire lunar module power demands. Two batteries could nominally supply power to the limits of their specified capacity at total spacecraft loads.

The lunar module electroexplosive device power requirements were met by the same pyrotechnic battery design used in the command module. However, the battery was requalified to the lunar module power and environmental requirements. The battery weighed 3.5 pounds, was approximately 3 by 3 by 6 inches, and has a capacity rating of 0.75 ampere-hours. Two batteries were installed — one on the ascent stage and one on the descent stage. Each of the batteries could meet all power requirements and the circuits were designed so that redundant power was provided for the electroexplosive devices. The lunar module and command module pyrotechnic batteries were identical, with one exception. The lunar module battery contained a test port that had been in the original design of the command module battery but was removed to allow terminal guards to be installed. The test port was removed from the Apollo 16 and 17 lunar module batteries to allow complete interchangeability with the command module batteries.

The lunar module batteries performed above the specified requirements when emergency power was needed during Apollo 13 after the loss of command and service module fuel cell power. However, postflight analysis revealed that an unexplained current spike occurred during transearth coast. The spike was associated with the occurrence of a "thump and snowflakes" reported by the crew. The postulated cause was that venting of potassium hydroxide by one of the descent batteries created a short circuit, igniting the mixture of hydrogen and oxygen normally produced by a silver-zinc battery. The resulting explosion blew the battery cover off and vented the electrolyte to space, thus causing the "thump and snowflakes." Although this specific failure mode could not be reproduced and the battery under question continued to operate satisfactorily throughout the mission, a number of significant design changes was made to preclude the possibility of any future explosions.

Another flight problem occurred during the translunar coast period of the Apollo 14 mission. A lunar module ascent battery indicated a lower-than-expected open circuit voltage (0.3-volt decay). Systems specialists were concerned that the battery might not support lunar descent or ascent, leaving the ascent stage with no power source redundancy. Also, mission rules precluded making a lunar landing with only one good battery. Real-time ascent battery testing, both on the ground and in the lunar module, supplied the necessary confidence that the battery would perform the required flight functions. No differences between the test battery and the flight battery were observed throughout the mission.

Two significant battery problems occurred in connection with the Apollo 15 mission. First, cracked cell cases were found in two descent batteries being prepared for installation on the lunar module (LM-10), the first lunar module with the five-battery configuration for a lunar surface stay of up to 72 hours. The cracks were primarily due to faulty assembly techniques. In addition, it was discovered that a bad batch of plastic was used in that production lot of batteries. Although extensive analysis, testing, and modification of flight preparation procedures allowed sufficient confidence to fly the LM-10 battery design, drastic structural deficiencies were postulated. As a result, even more extensive design changes were incorporated than those following the incident of Apollo 13.

The second problem, low battery capacity, became evident after the Apollo 15 mission during ground testing of spare lunar module descent batteries that had been activated prior to flight. The cause of the low capacity was a high percentage of zinc oxide in the negative plates. Improvements were made in manufacturing process control, acceptance test procedures, and inspection and assembly techniques with the result that a very high degree of confidence in battery performance was achieved. Adequate performance of the batteries on the last two Apollo missions demonstrated that the corrective measures were successful.

4.6.5.2 Power conversion and distribution.- The lunar module power distribution system consisted of equipment that controlled and regulated the electrical power; transmission lines that routed the power from the sources to the primary buses and from the primary buses to secondary local or remote buses; distribution boxes that controlled the switching and provided circuit protection; and conversion equipment such as inverters, converters, battery chargers, transformers, and rectifiers.

The system voltage and power quality were among the first requirements defined. Standards were set for voltage, steady-state voltage regulation limits, abnormal voltage limits, and voltage transients. Thus, all users of power could design and test to the same electrical specifications. Additional requirements were defined such that wiring for redundant systems and controls was physically separated and routed through separate connectors, and control circuitry was designed to preclude the switching of return power. These additional requirements were to preclude problems similar to the following experienced on Gemini flights. In one case, switching functions for three redundant inverters were routed through the same electrical connector. When moisture entered the unsealed connector, these functions were disabled, thereby causing complete loss of alternating-current power. The second problem was inadvertent reaction control system thruster activity believed to have been caused by a return power circuit faulting to ground.

During tests of the power distribution system to determine adequacy of the control, protection, and component sizing, the contactors used for battery power were found to be undersized. The design required switching a maximum of 1100 amperes (based on use with fuel cells), but the batteries were capable of delivering 1700 amperes under short-circuit conditions. Therefore, the contractors were redesigned. When the fifth descent battery was added later, no additional development tests were required.

The first flight test of the electrical power distribution system showed unexpected inverter output voltage fluctuations. A review of the flight plan and data showed that pulsing gimbal motors constituted the only inverter load. When this same configuration was ground tested with the load turned off, the inverter, while trying to maintain a regulated voltage, produced an oscillating output that lasted 100 milliseconds. In flight, the gimbal motors had been turned on and off several times each second as required. This switching therefore caused the fluctuations on the inverter output that were observed during flight. When the inverters were more heavily loaded in subsequent missions, the fluctuations did not occur.

The lunar module power distribution system was also used to provide power to the command module, even though this was not a design requirement. Normally, during the translunar phase of the mission, the command module provided power to the lunar module heating loads; however, during the flight of Apollo 13, power was provided to the command module from the lunar module.

A more detailed discussion of the battery system and the power conversion and distribution system may be found in references 4-36 and 4-62.

4.6.6 Propulsion Systems

4.6.6.1 Descent propulsion system.- The propulsion system for the lunar module descent stage was designed to deorbit the lunar module and to allow it to hover above the lunar surface before landing. To accomplish this maneuver, a propulsion system was developed that used hypergolic propellants and a gimbaled, pressure-fed, ablatively cooled engine that was capable of being throttled. The propellants selected were nitrogen tetroxide (oxidizer) and a mixture of 50 percent unsymmetrical dimethyl hydrazine and 50 percent hydrazine (fuel).

The development and qualification of the descent propulsion system in support of the first lunar landing mission covered a period of approximately 6 years, from August 1963 to April 1969. Included within this period were component-level and system-level developmental and qualification testing. In many cases, pre-production configuration components were used in early system-level developmental testing. In the developmental and qualification testing of components and systems, extensive design-limit tests, off-limit tests, and component malfunction tests were used to determine potential design deficiencies and to document operational limits of the system. Significant problems encountered during this time period are discussed.

In the initial concept of the pressurization system for the descent propulsion system, helium was to be stored in two high-pressure tanks. As the design of the lunar module progressed, vehicle weight became a critical factor; therefore, a feasibility study was initiated early in 1964 to evaluate the use of a supercritical helium storage tank in the pressurization system. The concept consisted of storing helium at approximately minus 450° F in a thermally insulated pressure vessel. Pressure in the storage tank was allowed to rise because of a heat leak into the tank (approximately 8 to 10 Btu/hr). As helium was used from the tank, additional heat was provided to the helium to maintain the pressure. The heating was accomplished by the use of an external fuel-to-helium heat exchanger and a helium-to-helium heat exchanger located within the tank. A second fuel-to-helium heat exchanger increased the helium temperature to near ambient conditions (approximately 40° F) before the helium was supplied to the pressure regulators in the pressurization system.

By late 1964, the analysis and feasibility testing of the supercritical helium system indicated that it was operationally feasible and that a weight saving of 280 pounds could be realized by using the supercritical helium system rather than the ambient storage system. Consequently, the descent propulsion pressurization system was redesigned to incorporate a supercritical helium storage tank. Because the pressure in the supercritical storage tank increased with time, a minimum required standby time of 131.5 hours from prelaunch topoff until first usage in the nominal lunar landing was defined.

During design and development of the supercritical helium pressurization system, freezing of the fuel in the fuel-to-helium heat exchanger was found to occur during the start sequence under certain start conditions. The freezing condition was caused by the flow of a substantial amount of helium needed to bring the propellant tanks from pre-pressurization levels to regulator lockup pressure conditions, during which time no fuel was flowing through the fuel passages of the heat exchanger. A study was made of various systems to alleviate the flowing of cold helium with no fuel flow. An ambient helium pre-pressurization start bottle and an electrical heater system were the two main methods considered. The use of an ambient helium pre-pressurization start bottle was selected for overall simplicity and reliability.

In the initial fuel-to-helium heat exchanger configuration, a nickel-chromium alloy was used in bonding the side panels to the core. During the testing of LTA-5 at the White Sands Test Facility, one of the side panels separated from the core and ruptured. This rupture resulted in a gross fuel leak and subsequent fire. The cause of the failure was traced to the factory test of the rig. The heat exchanger had been subjected to cryogenic temperatures with water in the fuel passages; cryogenic temperatures caused freezing of the water that resulted in structural failure of the nickel-chromium braze material. Subsequent exposure to system operating pressure at the White Sands Test Facility resulted in rupture of the side panels. Two items were implemented to avoid this problem on subsequent vehicles. The nickel-chromium braze material was changed to a gold alloy to increase the bonding strength, and water was eliminated from cold-flow testing of vehicles when cryogenic helium was to be used in a system.

The development of the helium pressure regulator was plagued by problems. Among these problems were excessive external and internal helium leakage, cracking of the main poppet during slam starts, and the inability of the vendor to meet delivery schedules. To ensure that an acceptable regulator was available to meet flight schedules, a second source vendor was selected to develop a regulator in parallel with the original vendor.

In the initial phases of engine design definition and development, two different throttling concepts were considered. In one concept, a fixed-area injector with helium injection at reduced thrust was to be used to maintain adequate combustion efficiency. Propellant flow variation was controlled by throttling valves that used system fuel pressures to actuate the hydraulic servo-control valves. In the other concept, a single movable sleeve was used to modulate the injector fuel and oxidizer flow area. The injector sleeve was linked mechanically to two cavitating flow control valves and an electrically driven throttle actuator assembly. The variable-area injector throttling concept was selected after approximately 18 months of parallel development of the two concepts.

The descent propulsion system flight program consisted of three preliminary earth orbital and lunar orbital flights, one aborted lunar landing, and six lunar landings. All flights were successful; however, anomalies did occur during the flight program that required modifications to procedures and hardware. The significant anomalies are discussed.

A premature descent engine shutdown occurred on Apollo 5 when the descent propulsion system was fired for the first time in space. The early shutdown occurred because the descent engine thrust monitor was programmed to stop the engine if any three consecutive 2-second accelerometer samples (taken after the engine was commanded on) indicated an accumulated velocity of less than 45 centimeters per second. This criterion was based on a nominal engine start with the propellant tanks initially at full operating pressure and with the helium supply on line. The lunar module for this mission did not have an ambient-start helium storage tank, and the supercritical helium tank was isolated by the three explosive valves that were fired automatically by the pyrotechnic system 1.3 ±0.3 seconds after the first engine-on command. Therefore, the system pressures during the first descent propulsion system start, which were normal for this particular system configuration, did not rise fast enough to meet the thrust-time criterion programmed into the guidance computer. All logic circuits that could command engine cutoff or inhibit an engine start were reevaluated to prevent an unnecessary engine shutdown on subsequent flights.

During the first 35 seconds of the first descent engine firing on Apollo 9, the regulator outlet manifold pressure decreased from 235 to 188 pounds per square inch, whereas the pressure should have been maintained at 247 pounds per square inch. The temperature data indicated that the internal heat exchanger was initially blocked. At approximately 35 seconds after engine ignition, the blockage cleared and allowed the regulator outlet manifold pressure to rise to the proper operating level. An evaluation of this problem revealed that the supercritical helium servicing procedures could have entrapped air in the pressurization system, which then froze on contact with the cold helium flow in the heat exchanger. This problem was eliminated on later flights by modifying the servicing procedures to preclude the entrapment of air in the system.

The pressure in the Apollo 9 lunar module supercritical helium tank began decaying immediately after termination of the first descent engine firing; however, the normal tank response is to increase in pressure. An external helium leak was suspected as the most likely cause of the pressure decay. This suspicion was amplified by failure of an internally brazed squib valve during drop tests on LM-2 at the Manned Spacecraft Center. The failure was caused by a crack in the brazing material, which was thin in the failed area. The leak experienced during Apollo 9 was probably caused by a defective braze that was internal to the squib valve and could not be inspected. A redesigned valve that could be completely inspected was used on all subsequent vehicles.

Two problems occurred on the Apollo 11 lunar module, the first lunar landing vehicle, that required modifications to the descent propulsion system of subsequent vehicles. The first problem occurred at 685 seconds into the powered descent initiation firing. The propellant low-quantity warning light was triggered in one of the four propellant tanks, indicating a shortage of propellant. Based on remaining calculated quantities and corrected propellant quantity gaging system indications, the occurrence of the propellant low-quantity warning was discovered to

be premature by 36 seconds. The early warning was the result of propellant sloshing created by sudden vehicle maneuvers and by attitude changes. Slosh baffles were incorporated on the lunar modules for Apollo missions 14 through 17 to minimize the slosh in the tanks.

Secondly, when the propellant and the supercritical helium tanks were vented after lunar landing, the fuel-to-helium heat exchanger froze. Consequently, fuel was trapped in the fuel line between the frozen heat exchanger and the engine shutoff valves. Subsequent heating of this section of the fuel line from engine heat soakback increased the pressure in this line to an unsafe level. After 30 minutes, the fuel pressure was relieved by thawing of the heat exchanger, by failure of the line-bellows linkage, or by failure of the seals in the prevalve. The exact cause of relief was not determined. On subsequent flights, the venting procedure was modified to isolate the supercritical helium tank with the latching solenoid valves during venting of the propellant tanks and to delay supercritical helium venting until immediately before ascent from the lunar surface. On the lunar modules for Apollo 13 and subsequent missions, a bypass line around the heat exchanger was incorporated as an added safety feature to relieve the trapped fuel pressure if freezing of the heat exchanger should occur.

Because of the requirement to increase the firing time of the descent propulsion system to accommodate the increased lunar landing payload, major modifications were made to the lunar modules for the Apollo 15, 16, and 17 missions. The two most significant modifications were an increase in the volume of the propellant tanks and the use of new chamber material in the descent engine. As a result of these changes, the hover time was increased by approximately 100 seconds.

Further details of the development, testing, and flight performance of the descent propulsion system are given in reference 4-63.

4.6.6.2 Ascent propulsion system.- The ascent propulsion system was designed to provide propulsive power for launching the ascent stage of the lunar module from the surface of the moon into lunar orbit for rendezvous with the orbiting command and service module. The ascent engine was a fixed-thrust, restartable, bipropellant rocket engine that had an ablatively cooled combustion chamber, throat, and nozzle. Propellant flow to the ascent engine combustion chamber was controlled by a valve package assembly that was equipped with dual passages for the fuel and the oxidizer and had two series-connected ball valves in each flow path.

Proven manufacturing techniques, design integrity, and ground-based testing were used in the development of the ascent propulsion system. The plan was to test and evaluate materials, components, and assemblies in progressively integrated configurations, using various test rigs and prototype structural simulators. The most significant tests conducted during the development and qualification of the ascent propulsion system were accomplished by using propulsion system test vehicle PA-1 at the White Sands Facility. This test vehicle incorporated essentially all of the flight-weight components and functionally duplicated the flight ascent propulsion system. The intent of these tests was to demonstrate that the system could function properly under all conditions that could be expected during a lunar ascent.

During the development of the ascent propulsion system, leakage and functional failures of the helium solenoid valves and the helium pressure regulators occurred, which required a redesign of each component; however, the most significant problem was related to the ascent engine. The original ascent engine injector experienced thrust chamber compatibility problems and several cases of combustion instability when subjected to bomb tests. The time required for fabrication of the injector was also high, which resulted in unacceptably long periods to obtain the hardware needed for testing redesigns. Because of these problems and a pressing schedule, a backup ascent engine injector program was initiated with another contractor. The original contractor made numerous modifications to the injector design and the fabrication procedures in an effort to meet the injector completion schedule. However, the alternate contractor already had an acceptable injector that passed all tests with no reservations before the original contractor's testing was completed. Consequently, the alternate contractor was selected to fabricate the injector and assemble the engine for all flight vehicles subsequent to the Apollo 5 lunar module.

The ascent propulsion system performance was satisfactory throughout the flight program. The development and performance of the ascent propulsion system is discussed in greater detail in reference 4-64.

4.6.6.3 Reaction control system.- The Apollo missions required that the lunar module maintain various attitudes with respect to its flight path and be able to maneuver in three axes. Separation from the command and service module, docking with the command and service module, and various translation maneuvers during the lunar-orbit rendezvous were required. In addition, X-axis longitudinal translation was required to provide propellant-settling thrust for the descent and ascent propulsion systems. To meet the objectives, the lunar module reaction control system had two independent bipropellant systems. Each system provided the vehicles with attitude control and X-axis translation when used independently. When used together, Z- and Y-axis translation could be obtained. The two systems were identical in all respects other than engine locations and thrust vectors.

Each engine was a pulse-modulated, radiation-cooled, 100-pound thruster nearly identical to those used on the service module. Major engine components included inlet filters, two solenoid-operated propellant injection valves, an injector, and a nozzle skirt. The propellant and pressurizing gas storage components were grouped for the purpose of simplifying the checkout and repair procedures. The system was installed in two bay areas and on four outrigger booms. The tankage modules (helium, nitrogen tetroxide, and Aerozine-50) were installed on the left- and right-hand sides of the lunar module directly above the ascent propulsion system tanks. The engines were installed in clusters of four on the outriggers which were located around the periphery of the ascent stage at 45° to the orthogonal (pitch and roll) axes. Two of the four engines in each cluster were fed from each propellant supply.

In addition to the two separate systems, redundancy also extended to components within each system such as regulators, check valves, and explosive pressurization valves. Command and service module components that had already been developed were used wherever possible. Whenever such a component could not be used directly but could be made usable on the lunar module with minor modification, a common-technology approach was followed. The manufacturer of the command and service module part was given the task of modifying his product to make it usable on the lunar module. Significant cost savings and increased reliability resulted.

The environmental constraints for the lunar module reaction control system generally were less severe than those of the service module reaction control system; therefore, the experience gained with the service module components in the areas of vibration, shock, thermal vacuum, propellant compatibility, and susceptibility to contamination could be applied directly to the lunar module design. Two specific areas in which environmental conditions differed significantly were the vibration and the cold soaking of the four lunar module engine clusters. Also, because the lunar module propellant tanks and the helium tank were larger than those of the service module, the vibration test experience with the service module tanks could not be applied directly to the lunar module hardware. In these instances, the components were subjected to environmental testing dictated specifically by the lunar module environments.

The development and certification of the lunar module reaction control system consisted of nine major ground test programs. A brief discussion of several of the test programs follows.

The pre-production system development test was the first test in which the proposed configuration of the lunar module reaction control system was hot fired. The primary and secondary objectives, respectively, were to investigate the dynamic characteristics of the propellant-feed system and to evaluate propellant manifold priming procedures and engine performance during multi-engine firings. The test disclosed higher-than-predicted feed pressure fluctuations during the short-pulse high-frequency firings. As a result, a complete reevaluation of the control system requirements helped to define the interface between the guidance system and the reaction control system. The net effect was changing the maximum pulse frequency from 25 to 7 pulses per second. The test also resulted in modification of the planned flight-activation procedure to eliminate high transient pressures during priming of the propellant manifolds. Priming would be accomplished at tank pad pressures versus nominal operating tank pressures.

The production system development program objective was to determine if the system could meet fundamental design requirements. As such, the test configuration was almost identical to that of the reaction control system on the Apollo 5 lunar module. The test program demonstrated the capability of the system design to meet fundamental requirements. However, salient characteristics of some components were disclosed which altered the planned system operational mode. An outstanding example was the discovery that high flow rates or pressure surges would cause the propellant latching valves to unlatch and shift position. This valve problem was resolved for flight by requiring the crew to ascertain correct valve positions during critical mission phases.

be premature by 36 seconds. The early warning was the result of propellant sloshing created by sudden vehicle maneuvers and by attitude changes. Slosh baffles were incorporated on the lunar modules for Apollo missions 14 through 17 to minimize the slosh in the tanks.

Secondly, when the propellant and the supercritical helium tanks were vented after lunar landing, the fuel-to-helium heat exchanger froze. Consequently, fuel was trapped in the fuel line between the frozen heat exchanger and the engine shutoff valves. Subsequent heating of this section of the fuel line from engine heat soakback increased the pressure in this line to an unsafe level. After 30 minutes, the fuel pressure was relieved by thawing of the heat exchanger, by failure of the line-bellows linkage, or by failure of the seals in the prevalve. The exact cause of relief was not determined. On subsequent flights, the venting procedure was modified to isolate the supercritical helium tank with the latching solenoid valves during venting of the propellant tanks and to delay supercritical helium venting until immediately before ascent from the lunar surface. On the lunar modules for Apollo 13 and subsequent missions, a bypass line around the heat exchanger was incorporated as an added safety feature to relieve the trapped fuel pressure if freezing of the heat exchanger should occur.

Because of the requirement to increase the firing time of the descent propulsion system to accommodate the increased lunar landing payload, major modifications were made to the lunar modules for the Apollo 15, 16, and 17 missions. The two most significant modifications were an increase in the volume of the propellant tanks and the use of new chamber material in the descent engine. As a result of these changes, the hover time was increased by approximately 100 seconds.

Further details of the development, testing, and flight performance of the descent propulsion system are given in reference 4-63.

4.6.6.2 Ascent propulsion system.- The ascent propulsion system was designed to provide propulsive power for launching the ascent stage of the lunar module from the surface of the moon into lunar orbit for rendezvous with the orbiting command and service module. The ascent engine was a fixed-thrust, restartable, bipropellant rocket engine that had an ablatively cooled combustion chamber, throat, and nozzle. Propellant flow to the ascent engine combustion chamber was controlled by a valve package assembly that was equipped with dual passages for the fuel and the oxidizer and had two series-connected ball valves in each flow path.

Proven manufacturing techniques, design integrity, and ground-based testing were used in the development of the ascent propulsion system. The plan was to test and evaluate materials, components, and assemblies in progressively integrated configurations, using various test rigs and prototype structural simulators. The most significant tests conducted during the development and qualification of the ascent propulsion system were accomplished by using propulsion system test vehicle PA-1 at the White Sands Facility. This test vehicle incorporated essentially all of the flight-weight components and functionally duplicated the flight ascent propulsion system. The intent of these tests was to demonstrate that the system could function properly under all conditions that could be expected during a lunar ascent.

During the development of the ascent propulsion system, leakage and functional failures of the helium solenoid valves and the helium pressure regulators occurred, which required a redesign of each component; however, the most significant problem was related to the ascent engine. The original ascent engine injector experienced thrust chamber compatibility problems and several cases of combustion instability when subjected to bomb tests. The time required for fabrication of the injector was also high, which resulted in unacceptably long periods to obtain the hardware needed for testing redesigns. Because of these problems and a pressing schedule, a backup ascent engine injector program was initiated with another contractor. The original contractor made numerous modifications to the injector design and the fabrication procedures in an effort to meet the injector completion schedule. However, the alternate contractor already had an acceptable injector that passed all tests with no reservations before the original contractor's testing was completed. Consequently, the alternate contractor was selected to fabricate the injector and assemble the engine for all flight vehicles subsequent to the Apollo 5 lunar module.

The ascent propulsion system performance was satisfactory throughout the flight program. The development and performance of the ascent propulsion system is discussed in greater detail in reference 4-64.

4.6.6.3 Reaction control system.- The Apollo missions required that the lunar module maintain various attitudes with respect to its flight path and be able to maneuver in three axes. Separation from the command and service module, docking with the command and service module, and various translation maneuvers during the lunar-orbit rendezvous were required. In addition, X-axis longitudinal translation was required to provide propellant-settling thrust for the descent and ascent propulsion systems. To meet the objectives, the lunar module reaction control system had two independent bipropellant systems. Each system provided the vehicles with attitude control and X-axis translation when used independently. When used together, Z- and Y-axis translation could be obtained. The two systems were identical in all respects other than engine locations and thrust vectors.

Each engine was a pulse-modulated, radiation-cooled, 100-pound thruster nearly identical to those used on the service module. Major engine components included inlet filters, two solenoid-operated propellant injection valves, an injector, and a nozzle skirt. The propellant and pressurizing gas storage components were grouped for the purpose of simplifying the checkout and repair procedures. The system was installed in two bay areas and on four outrigger booms. The tankage modules (helium, nitrogen tetroxide, and Aerozine-50) were installed on the left- and right-hand sides of the lunar module directly above the ascent propulsion system tanks. The engines were installed in clusters of four on the outriggers which were located around the periphery of the ascent stage at 45° to the orthogonal (pitch and roll) axes. Two of the four engines in each cluster were fed from each propellant supply.

In addition to the two separate systems, redundancy also extended to components within each system such as regulators, check valves, and explosive pressurization valves. Command and service module components that had already been developed were used wherever possible. Whenever such a component could not be used directly but could be made usable on the lunar module with minor modification, a common-technology approach was followed. The manufacturer of the command and service module part was given the task of modifying his product to make it usable on the lunar module. Significant cost savings and increased reliability resulted.

The environmental constraints for the lunar module reaction control system generally were less severe than those of the service module reaction control system; therefore, the experience gained with the service module components in the areas of vibration, shock, thermal vacuum, propellant compatibility, and susceptibility to contamination could be applied directly to the lunar module design. Two specific areas in which environmental conditions differed significantly were the vibration and the cold soaking of the four lunar module engine clusters. Also, because the lunar module propellant tanks and the helium tank were larger than those of the service module, the vibration test experience with the service module tanks could not be applied directly to the lunar module hardware. In these instances, the components were subjected to environmental testing dictated specifically by the lunar module environments.

The development and certification of the lunar module reaction control system consisted of nine major ground test programs. A brief discussion of several of the test programs follows.

The pre-production system development test was the first test in which the proposed configuration of the lunar module reaction control system was hot fired. The primary and secondary objectives, respectively, were to investigate the dynamic characteristics of the propellant-feed system and to evaluate propellant manifold priming procedures and engine performance during multi-engine firings. The test disclosed higher-than-predicted feed pressure fluctuations during the short-pulse high-frequency firings. As a result, a complete reevaluation of the control system requirements helped to define the interface between the guidance system and the reaction control system. The net effect was changing the maximum pulse frequency from 25 to 7 pulses per second. The test also resulted in modification of the planned flight-activation procedure to eliminate high transient pressures during priming of the propellant manifolds. Priming would be accomplished at tank pad pressures versus nominal operating tank pressures.

The production system development program objective was to determine if the system could meet fundamental design requirements. As such, the test configuration was almost identical to that of the reaction control system on the Apollo 5 lunar module. The test program demonstrated the capability of the system design to meet fundamental requirements. However, salient characteristics of some components were disclosed which altered the planned system operational mode. An outstanding example was the discovery that high flow rates or pressure surges would cause the propellant latching valves to unlatch and shift position. This valve problem was resolved for flight by requiring the crew to ascertain correct valve positions during critical mission phases.

Other component problems discovered were (1) transducer diaphragm incompatibility with propellant combustion residuals and (2) an inadequate seal design in the ground half of the propellant-servicing quick-disconnect coupling. The contamination control requirements (particle size, sampling procedures, etc.) and the cleaning procedures (flushing sequence, etc.) used for the production system were not adequate to preclude numerous failures of components because of particulate contamination. The test program provided valuable experience in helium and propellant servicing that was used in the design of ground support equipment at the launch site.

The third system-level test program, a design verification test program, was broader in scope than the production system development program. Not only was acceptable operation of the system demonstrated, but other factors such as manufacturing and checkout procedures, contamination control techniques, and propellant decontamination procedures used on flight systems were verified.

The structural integrity of the engine cluster and vehicle mounting hardware was verified during the production cluster environmental test program. The cluster design withstood all the mission-level random and sinusoidal vibration loads to which it was subjected, with the exception of the failure of a chamber pressure transducer bracket. This failure resulted in a redesign of the bracket assembly, which was retrofitted on the first flight lunar module.

The lunar module production cluster firing test program objectives were (1) to evaluate flightworthy lunar module engine cluster performance under simulated altitude conditions and (2) to determine the heat-transfer characteristics of the cluster during steady-state and pulse-mode duty cycles. The firing program consisted of single and multiengine firings that simulated selected portions of expected mission duty cycles. During the low-temperature mission duty cycle part of the program, the combustion chamber of an upfiring engine was destroyed by an explosion due to an accumulation of nitrate compounds. Contributing factors were found to be the upfiring attitude of the engine, low engine temperatures, helium saturation of the propellants, short-pulse firings, and relatively high test-cell ambient pressures. For lunar module application, engine failure was determined to be unlikely when the flange temperature was maintained above 120° F. Heater integration tests were performed following this requalification program. The tests demonstrated that, for certain combinations of short pulses, the engine flange cooled faster than the heaters could warm it. The net result of the tests was establishment of a safe engine operating regime that satisfied mission requirements.

Evaluation of the interconnect propellant feed mode was accomplished during the integrated reaction control system/ascent propulsion system PA-1 test program. The test program and analysis demonstrated that neither the reaction control system nor the ascent propulsion system experienced any detrimental effects during the interconnect feed operation. The test program did, however, indicate a potential problem with a pressure rise of trapped propellants in the inlet manifolds. This rise resulted from thermal soakback of a hot engine. Consequently, the Apollo malfunction procedures incorporated a pressure relief procedure.

An in-house lunar module reaction control system test program was conducted at the Manned Spacecraft Center (1) to define the general operational characteristics of the lunar module reaction control system under simulated altitude conditions and (2) to obtain performance data on individual subsystem components. Anomalies that were observed, investigated, and resolved included propellant latch valve leakages, pressure switch failures, and injector cooling below 120° F. The propellant latch valve leakage was caused by particulate contamination; system cleanliness was emphasized. The pressure switch failures could be of two types - failed closed and failed open. Contamination of the switch mechanism by semiliquid combustion products was the cause of a failed open switch. The design deficiency was corrected for flight hardware. The injector cooling problem was traced to the engine duty cycle.

The first lunar module flight, Apollo 5, was conducted to verify the lunar module ascent and descent propulsion systems and the abort staging function for manned flight. Because of problems with the guidance system, the reaction control system operated in several off-limit conditions and resulted in failures in the system. Within 3.1 minutes, the system A propellant was depleted to 27 percent, and that system was isolated to conserve propellant. System B continued at a rapid duty cycle until propellant depletion 5 minutes later, at which time helium started leaking through the collapsed system B fuel bladder. Satisfactory vehicle rates were

restored by the system B thrust reduction (resulting from propellant depletion) and by the isolation of system A propellant tanks. While system B was operating with two-phase oxidizer and helium-ingested fuel, the quad 4 upfiring engine failed. When system A was reactivated, the system A main shutoff valve on the oxidizer side inadvertently closed. The ascent propellant interconnect valves were later opened, returning operation of the engines to normal until the interconnect valves were closed. The depletion of all propellant during the last minutes of the second ascent engine firing allowed the spacecraft to tumble. Each of these specific reaction control system anomalies (i.e., the bladder, the engine, and the oxidizer main shutoff valve failures) was duplicated when a ground test system was exposed to similar duty-cycle and environmental conditions after the flight.

Also during the Apollo 5 lunar module flight, the upper limit of 190° F on the engine cluster was exceeded on numerous occasions with no deleterious effects; the Apollo 9 lunar module also exhibited this phenomenon. As a result, additional vendor tests were conducted to define a maximum temperature to which the engine valves could be subjected without degradation of performance. The tests were terminated at 375° F when no degradation in performance was experienced. An instrumentation change (increasing the upper limit to 260° F) was made to accommodate the expected operating temperature of the clusters.

Extremely good reliability of the lunar module and service module reaction control system engine injector valves was demonstrated on flights through Apollo 14. No engine injector valve leakage due to engine operation or malfunction was observed. A 25-pound weight saving was accomplished by the deletion of the valves from the system for all later flights.

During system pressurization on the Apollo 16 lunar module, system A regulator outlet pressure continued to rise after reaching nominal lockup pressure. The leakage persisted throughout the mission after pressurization. When the regulator output pressure reached 209 pounds per square inch, the system A interconnect valves were opened to transfer propellant to the ascent propulsion system. To permit mission continuation, this operation was repeated twice until sufficient blowdown capability existed. The pressure in system A eventually increased to 237 pounds per square inch, at which point the relief valve operated. Subsequently, periodic pressure relief occurred. Postflight analysis and tests showed that the most likely cause of the malfunction was contamination caused by a set of unique events; specifically, numerous replacements of components involving brazing downstream of the regulator, and subsequently subjecting the regulator to reverse flow conditions.

The design, development, and performance of the lunar module reaction control system are discussed further in reference 4-65.

4.6.7 Guidance, Navigation, and Control System

The lunar module guidance, navigation, and control system performed the necessary descent and ascent navigation, generated guidance commands in the form of thrust-level and attitude commands, and controlled vehicle attitude.

Navigation for descent to the lunar surface was the continuous process of estimating and updating the vehicle's position and velocity components in the reference coordinate system (determining the state vector) at given times using landing radar and accelerometer data. The lunar landing guidance equations calculated thrust-level and attitude commands based upon the updated state vector. The thrust-level and attitude commands were then executed by the control system.

The ascent maneuver required that the guidance, navigation, and control system be initialized with the orbit insertion parameters necessary for rendezvous with the command and service module. The ascent engine had no thrust direction control capability and could not be throttled. Therefore, the guidance system controlled the thrust vector by generating attitude commands to control the direction of the vehicle by use of the reaction control system. When the insertion velocity was achieved, engine thrust was terminated.

The guidance, navigation, and control system originally consisted of a guidance and navigation system and a stabilization and control system (ref. 4-66). The stabilization and control system contained an abort guidance system which was to be used if the primary guidance and navigation system failed. Late in 1964, a design review of guidance and control requirements resulted in the integration of the guidance, navigation, and control functions. At the same time, the capabilities of the abort guidance system were expanded and a general-purpose computer was added to the system.

Figure 4-21 is a functional diagram of both the primary guidance and navigation system and the abort guidance system, and the interfaces of each with the control electronics system. The primary system was essentially the same as that in the command and service module. The significant differences between the two systems were:

a. The lunar module optical system included a periscope-type telescope with a 60-degree field of view between mechanical stops. Six detents allowed a full 360-degree viewing capability.

b. The lunar module primary system included computer programs required for the descent and ascent phases and the control laws used in the digital autopilot.

c. The landing radar and rendezvous radar were part of the lunar module primary system.

The abort guidance system assumed control of the lunar module if the primary system failed at any time in the mission. This system could guide the lunar module to a safe lunar orbit and execute rendezvous commands. The abort guidance system consisted of an abort sensor, abort electronics, and a data entry and display assembly.

The abort sensor assembly was rigidly mounted to the vehicle and contained three rate integrating gyros and three pendulous accelerometers. These inertial sensing units provided attitude and velocity data to the abort electronics assembly which was a general-purpose computer. Operating on the attitude and velocity data from the inertial sensors, the computer generated guidance commands and engine on-off commands that were sent to the control electronics system. The abort guidance system was initialized with, and periodically realigned to, the primary guidance system.

The control electronics system consisted of the attitude and translation control assembly; the descent engine control assembly; descent engine gimbal drive actuators; rate gyro assemblies; rotation, translation, and throttle hand controls; flight director attitude indicators; and various other control assemblies. The control electronics provided the interface which drove the propulsive devices; that is, the 16 attitude control thrusters, the gimbaled and throttleable descent engine, and the ascent engine.

The development and testing of the primary guidance and navigation system was essentially the same as that discussed in section 4.4.8. The only differences were the interfaces with the landing radar and rendezvous radar and the autopilot interface with the engine. The types of testing performed during the control electronics development program were design feasibility, design verification, and qualification. The significant problems encountered are listed in table 4-VI. The types of testing performed during the abort guidance system test program were design feasibility design verification, and design proof to qualification limits. A full mission engineering simulation was performed to verify the compatibility between the hardware and computer software. The significant problems encountered are summarized in table 4-VII. A detailed discussion of the development and testing of the abort guidance system is given in reference 4-67.

Performance of the primary and abort guidance systems throughout the Apollo flights was excellent. No failures required the use of a backup system in any of the manned flights. During the unmanned Apollo 5 mission, the first scheduled maneuver was terminated early and the subsequent maneuvers had to be performed by using the backup control electronics system. The actual thrust buildup profile was different from the profile stored in the computer. The computer detected a difference in thrust levels and automatically shut the engine down.

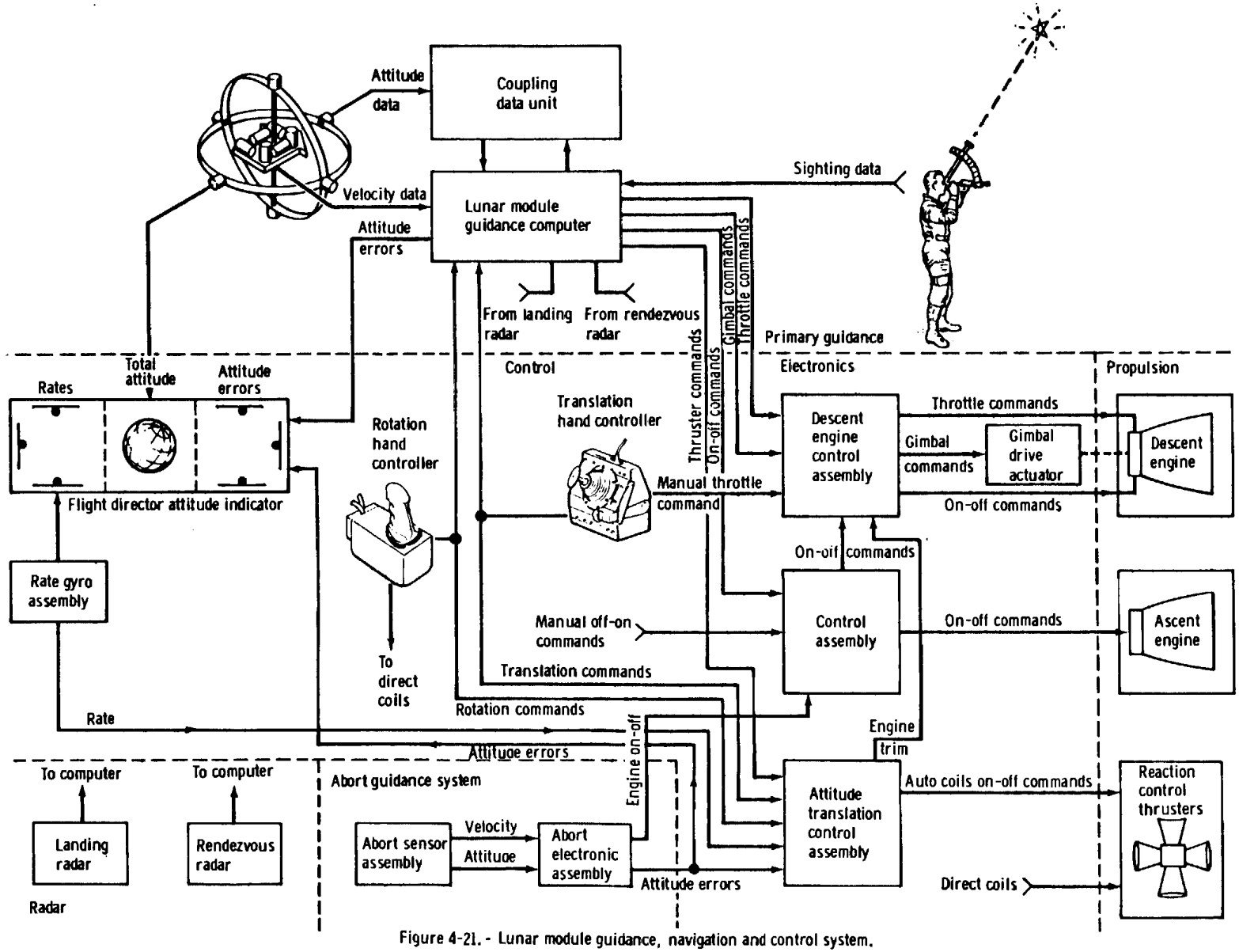

Figure 4-21. - Lunar module guidance, navigation and control system.

ORIGINAL PAGE IS
OF POOR QUALITY

TABLE 4-VI.- CONTROL ELECTRONICS DEVELOPMENT PROBLEMS

Equipment	Problem	Corrective action
Attitude and translation control assembly	Solder cracks were caused by expanding urethane filler.	The joint was made stronger by making it a reflowed convex solder joint.
Thrust/translation controller assembly and attitude controller assembly	Switch adjustment changed.	The switch adjustment procedures were revised.
Gimbal drive actuator	Brake failed to engage and the actuator would coast.	The motor was redesigned to include contact drag principle.

TABLE 4-VII.- ABORT GUIDANCE SYSTEM DEVELOPMENT PROBLEMS

Equipment	Problem	Corrective action
Abort sensor assembly	Single-point temperature sensor for thermal control.	Nine redesigns of beryllium block.
Abort sensor assembly mounting feet	Fatigue and vibration failures.	Two redesigns of mounting feet.
Gyro	Asymmetrical scale factor	Redesign of pulse torque loop.
Abort electronics assembly	Excessively rapid fall time of read and write pulse.	Redesign for slower fall time.
Abort electronics assembly	Penetration of matrix board split pin wire wrap.	Change of manufacturing procedures.
Abort electronics assembly	Solder reacted with gold in component leads causing solder to become brittle and crack.	Component leads were pretinned to prevent solder from coming into contact with gold.
Data entry display assembly	Cracks and bonding separation of electroluminescent segments.	Better screening procedures.
Data entry display assembly	Pushbutton was binding.	Incorporation of test and screening procedures.

The most significant failure in the primary guidance system was the occurrence of five computer alarms during the Apollo 11 lunar module descent. The alarms indicated to the crew that the computer program was being called upon to perform too many tasks and that some tasks would not be executed. The problem was avoided on subsequent flights by not requiring the computer to process rendezvous radar data, which is not needed during descent. The computer workload was thus relieved, and no further alarms of this type were experienced.

The most significant failure in the abort guidance system occurred on Apollo 14. A failure of the 4-volt power supply in the abort electronics assembly caused the system to switch to the standby mode, making it unusable. Fortunately, the failure occurred after rendezvous was complete and the system was no longer needed. The cause of the failure could not be determined because the lunar module hardware could not be returned to earth.

The most significant failure in the control electronics system occurred during the unmanned Apollo 5 mission. Excessive thruster activity occurred during the ullage maneuver prior to the last ascent engine maneuver. The cause of the problem was a control system instability for the light ascent stage configuration and was corrected by a minor design change in the pulse-ratio-modulator electronics.*

The performance of the guidance and navigation systems was evaluated by studying the descent and ascent trajectories. A set of velocity curves was generated using data from the primary guidance system, the abort guidance system, and radar tracking. System performance was evaluated by comparing the velocity curves. Each gyro and accelerometer could be the source of small but unique errors in the velocity data. The alignment accuracy of the platform was also a source of error. By methodically varying the error sources, the velocity curves could be made to fit each other. The error sources were varied until the best curve fit was obtained, and that set of error sources was considered to be the most probable. For the descent analysis, time-of-ignition and time-of-touchdown were accurately known and, of course, the velocity relative to the lunar surface approached zero at touchdown. Velocity relative to the surface at ignition was not so well known and contributed to velocity error. The ascent analysis is much the same except that final velocity was not zero.

A summary of the significant error sources for the first five lunar landing missions is presented in table 4-VIII. The only significant error sources observed in the primary guidance system were accelerometer biases and platform alignment. (The accelerometers were mounted on the stable platform.) Both error sources caused errors that were less than that expected. In preparation for ascent, the platform alignment technique used one star and the gravity vector. Consequently, the expected error was different for each axis as shown. If the gravity vector was not vertical because of local gravity excursions, the alignment accuracy was affected. Gravity variations at the Apollo 15 landing site caused a misalignment of about 2 arc minutes, the largest alignment error of any Apollo mission. If the Apollo 15 misalignment were not included, the average and standard deviation values for ascent in table 4-VIII would be half as large. Analysis of data from the abort guidance system precludes isolation to a single error source. Errors along the spacecraft thrust axis (X-axis) may be caused by accelerometer bias or scale factor errors, whereas errors perpendicular to the thrust axis may be caused by accelerometer bias or misalignment errors. Table 4-VIII also summarizes abort guidance system performance during the lunar landing missions. Actual and expected uncertainties are almost the same.

4.6.8 Environmental Control

The lunar module environmental control system was made up of four main subsystems which performed the following functions: atmosphere revitalization, oxygen supply and cabin pressure control, water management, and heat transport. System performance is discussed, including consumables usage, cabin leakage, and changes as a result of experience.

The modular concept was necessary because of the weight and volume constraints, but use of this concept led to a number of problems. When equipment was modified or changed, the certification testing program was modified accordingly. Requalification tests, which caused the same basic package to be subjected to a number of different qualification tests, were required in many instances to qualify the revised equipment. The interdependence of packaging and functional efforts was demonstrated by tests, but a great number of tests and a considerable amount of time were required.

*This problem was not related to the excessive thruster activity that occurred when the primary guidance system was selected subsequent to the first ascent engine firing.

TABLE 4-VIII.- SYSTEM PERFORMANCE DURING DESCENT AND ASCENT

Source	Expected error	Average error	Standard deviation
Primary Guidance			
Descent:			
Accelerometer bias, μg	200	-6.5	32.7
Misalignment, arc sec	210	-20	107
Ascent:			
Accelerometer bias, μg	500	10.8	119.1
[a]Misalignment, arc sec	X = 148 Y = 57 Z = 88	-52	104
Abort Guidance			
Descent:			
X (scale factor + bias), μg	40	-68	43
Y (misalignment + bias), μg	70	-24	87
Z (misalignment + bias), μg	70	-80	97
Ascent:			
X (scale factor + bias), μg	50	-102	70
Y (misalignment + bias), μg	70	-31	80
Z (misalignment + bias), μg	70	-32	69

[a]The star plus gravity alignment technique results in a different expected error for each axis.

The environmental control system design concept of modularized subassemblies led to an early decision to perform certification testing at the module level for examining and verifying all possible component interactions during dynamic testing. Because of a stipulation that any field failure of a single component would require replacement of the complete module or lowest replaceable element, it was reasonable to assume that certification should be performed at the same vehicle replacement level of assembly. Component-level tests were primarily used to verify design and to establish performance curves, and subsystem-level tests were performed to identify component interaction and to verify that system design performance requirements were met.

Two sets of flight hardware were subjected to qualification testing. One set of hardware was tested to design-limit certification levels consisting of mission-design extreme environments, and one set was subjected to two normal mission level environment tests plus ground-based environment tests. Design changes resulting from component failures during initial certification testing, plus component additions and redesign imposed by changes in system requirements, were responsible for incorporating a delta qualification program following the initial logic-group qualification program.

To certify the life support section of the environmental control system, a complete test facility was built at the prime contractor's site. The man-rating test facility consisted of a vacuum chamber, a vacuum system, a data system and a life support section of the environmental control system, which was installed in the simulated lunar module cabin of the vacuum chamber. Using the simulator, the environmental control system manrating was accomplished in two steps. The first step (Phase I) used some pre-production hardware that differed from production hardware only in physical layout. The second step (Phase II) used production hardware that was modified to provide instrumentation points necessary for gathering parametric data.

To ensure compatibility between all subsystems during vehicle exposure to expected environments, the LTA-8 vehicle was installed in a special thermal-vacuum chamber in which six manned tests were conducted at design-extreme metabolic and thermal loads to verify flightworthiness. The significant hardware problems encountered during development and testing are discussed in detail in reference 4-68.

Some flight problems were encountered in the environmental control system, although none endangered the crewmen. One of the more annoying problems was the noise produced by the suit circuit flow, the glycol pumps, and the cabin fans. A muffler was added to the outlet of the glycol pumps to reduce the noise to an acceptable level.

Erratic carbon dioxide sensor readings on the lunar modules for the Apollo 10, 11, and 12 missions and crew reports of water entering the pressure garment assemblies prompted two revisions to the suit circuit assembly. A sense line from the water separator drain tank was rerouted from a point upstream to a point downstream of the carbon dioxide sensor and crew oxygen umbilicals. Also, a restrictor was added to the lithium hydroxide cartridges to limit the flow in the suit circuit and thus reduce the speed of the gas-driven water separators, which did not remove water effectively at high speeds. These changes were incorporated for Apollo 13.

The Apollo 11 crew, the first to sleep in the lunar module, found that sleeping on the floor was uncomfortable and cold. Consequently, hammocks were provided on all subsequent vehicles.

Internal leakage through an oxygen shutoff valve from the oxygen control module into one of the ascent stage oxygen tanks was experienced on Apollo 13. The problem was identified as a damaged O-ring, and new checkout procedures and hand-selected O-rings were incorporated. A similar O-ring problem occurred later in the Apollo program during bench checkout of the water control module valves. Again, hand selecting the O-rings and new installation procedures solved the problem which seems to be inherent in the multivalve manifold design.

Although no free water was reported in the suit circuit, the water separator speed remained high on Apollo 14. Consequently, a procedural change was instituted on the Apollo 15 vehicle and subsequent vehicles to increase the system pressure drop and thereby decrease the flow. This change was accomplished by reconfiguring the suit circuit assembly valves when the crew was suited without helmets and gloves. However, another problem was encountered in the ground checkout before the Apollo 15 mission. The requirement for unsuited rest periods resulted in low suit circuit differential pressure (high water separator speeds and whistling noises) when the hoses

were disconnected from the suits. Therefore, stowage brackets with orifices simulating pressure garment assembly pressure drops were designed for the oxygen umbilicals. A pressure garment assembly dryout procedure was also developed to remove perspiration from the suits after use.

Most redundant components included in the environmental control system were used for various reasons at some time during the Apollo flights. However, the redundant coolant loop and redundant water regulators were never needed because the primary systems performed satisfactorily.

4.6.9 Displays and Controls

The displays and controls were the interface between the crewmen and the lunar module. Controls were provided for manual operation of all systems, for making adjustments, and for selection of alternate operating modes. To permit easy observation or control, practically all displays and controls were located within reach on display panels. There were 160 circuit breakers, 144 toggle switches, 16 rotary switches, and other control equipment. Digital voltmeters, servometers, and two- and three-position flags displayed information such as time, altitude, range, pressure, and temperature.

About halfway through the Apollo program, after several broken or actuated circuit breakers had been found, films made of crew activities within the spacecraft showed that these conditions were often caused by crewmen inadvertently bumping the circuit breakers. Consequently, the bumper guards were modified to better protect the breakers and wicket-type guards were installed over critical switches. Other inadequacies encountered during the development program included failure of electronic parts, improper sizing of mechanical parts, breaking of glass, failure of solder joints, and failures due to contamination. Several failures also occurred during flight; however, the systems were so designed that the failures did not present a dangerous situation.

Two items that were not adequately developed were the circuit breakers and the digital timers. Hermetically sealed circuit breakers were specified; however, the manufacturer was unable to qualify this type of breaker because of assembly problems. One of the assembly problems involved the process of fitting the major circuit breaker assembly (containing a pushbutton, bridge contacts, and a bimetallic element) into a hermetically sealed can. Because the can case contained the contacts that mated with the inner bridge contacts, a specific contact pressure was difficult to obtain when the two parts were assembled and sealed with solder. Failures resulting from the lower contact pressure included contact chatter, high contact resistance in dry circuit testing, and high voltage drop. Development was discontinued and the qualified command-module-type breakers (not hermetically sealed) were used. The original digital timers of modular "cordwood" construction, had numerous problems. In this type of construction, electrical components (resistors, capacitors, diodes, etc.) were soldered between two printed circuit boards and the void between the boards was filled with a potting compound. The differential expansion between the potting compound and the circuit boards caused the solder joints to crack and thus break electrical contact. Rework of units could not correct the problem. The units were also susceptible to electrical noise. Eventually, a complete redesign and repackaging by a new manufacturer was required.

The altitude/range/range-rate meter glass face was discovered to be broken during the Apollo 15 flight. Newly developed information on stress corrosion was applied in a review of glass strength and stress. Spacecraft meters with similar glass applications had shields and doublers installed for subsequent flights.

A more detailed discussion of the lunar module displays and controls is given in reference 4-69.

4.6.10 Communications System

The lunar module communications system provided the voice link between the lunar module and the earth; between the lunar module and the command module; and, by means of a relay function, between the earth and the crewmen on the lunar surface. The system also provided the capabilities for:

a. Ranging between the earth and the lunar module

b. Ranging between the command module and the lunar module

c. Transmitting instrumentation data to the earth

d. Transmitting television to the earth

e. Voice intercommunication between crewmen

f. Up-linking digital commands from the earth

The communications system was composed of VHF and S-band equipment. The VHF portion was selected for short ranges (between the lunar module and the command module, and relay between the lunar module and extravehicular crewmen); and the S-band portion was selected for deep-space communications.

During the early phases of the program, the method of providing voice, data, and ranging functions went through several iterations as a result of changes in mission requirements. For instance, the VHF system first included one receiver and one transmitter, then two receivers and three transmitters, and finally two receivers and two transmitters. Both transmitter/receiver pairs (transceivers) were combined into a single unit along with a diplexer assembly that allowed simultaneous use of a single antenna for two separate frequencies. The channel A transceiver operated on a frequency of 296.8 megahertz; channel B operated on 259.7 megahertz. The control panel configuration allowed the selection of any combination of transmitters or receivers to give simplex or duplex operation. A range tone transfer assembly was added to provide turnaround of ranging tones received from the command module. The antenna system for the VHF equipment consisted of two inflight antennas located on opposite sides of the spacecraft and a lunar surface antenna on a mast that was cranked up and down from inside the crew compartment.

The S-band system consisted of a transceiver containing two identical phase-locked receivers, two phase modulators with driver and multiplier, and one frequency modulator. The S-band operating frequencies were 2282.5 megahertz for transmission and 2101.8 megahertz for reception. The nominal power output was 0.75 watt in a low-power mode. In the high-power mode, the output of the transceiver was increased to 18.6 watts. The original concept for power amplification was to use a traveling wave tube. However, because of weight and power limitations, an amplitron-type tube was incorporated into the design. During early development, unstable operating characteristics and very limited life were experienced with the amplitron tubes.

Three types of S-band antennas were used. A steerable antenna with a 26-inch-diameter parabolic dish automatically tracked the incoming signal to maintain an antenna position that pointed the dish centerline toward the earth. The antenna, operated either manually or automatically, provided a coverage of 174° in azimuth and 330° in elevation. It was used for transmission and reception while the lunar module was in lunar orbit, during descent, after landing, and during ascent from the lunar surface. The second type was an omnidirectional antenna. Two were used (one on the front and one on the rear of the ascent stage) to provide the required coverage. These antennas were used before activation of the steerable antenna and as its backup in case of a failure. The third type of S-band antenna was erectable and consisted of a 10-foot-diameter gold mesh parabolic reflector, an aiming device, and a tripod. The antenna, folded and carried in the descent stage, was erected by the crewmen on the lunar surface and used for television transmission. For Apollo 15, 16, and 17, the lunar communications relay unit (sec. 4.9) mounted on the lunar roving vehicle was available for lunar surface television, and the erectable antenna was not needed.

The remainder of the system consisted of a signal processor assembly, a digital up-link assembly, and a pulse-code-modulation and timing electronics assembly. The signal processor assembly provided signal modulation, mixing, mode switching, keying, and relay. An audio center for each crewman provided individual selection, isolation, and amplification of audio signals received and transmitted by the communications system. Also included was the capability for intercommunications between crewmen. The digital up-link assembly received an up-link 70-kilohertz subcarrier from the S-band transceiver, demodulated and decoded the up-link commands on this subcarrier and applied these commands to the lunar module guidance computer. It also provided capability for backup up-link voice on the same subcarrier. The pulse-code-modulation and timing electronics assembly received instrumentation information from throughout the spacecraft and processed this into a data bit stream which was placed on a subcarrier in the signal processor assembly and transmitted to earth by the S-band equipment.

One of the major design changes in the lunar module communications system, which affected three different units, resulted from an unpredictable condition in the aft equipment bay. It was originally assumed that the equipment bay, where the communications system units were mounted, would be at a vacuum when in space. Because of the slow vent rate of the thermal blankets and unavoidable cabin leakage, however, this area maintained a small pressure that caused a corona condition inside the units. This condition is an electrical arcing caused by ionization of the partial air pressure around high-voltage components. The corona resulted in degradation (and, sometimes, complete loss) of transmitted signals. This condition existed to various degrees in the S-band transceiver, the S-band power amplifier, and the VHF transceiver. Several modifications were attempted, including increased insulation and the use of various types of potting materials. The use of Teflon baffles between high-voltage parts inside the transmitter was successful in the VHF portion of the system, but the only solution that proved effective on the S-band transceiver and power amplifier was to put them in a sealed pressurized case.

Developmental problems that were discovered during the extensive testing program included cracked solder joints in the steerable antenna; extensive wire breakage in the signal processor assembly cable; relay reliability problems in the VHF transceiver; integrated circuit and transistor contamination problems in the digital up-link assembly, the VHF transceiver, and the steerable antenna; and structural vibration failures in the signal processor assembly and steerable antenna.

Flight performance of the communications system was very good. Various improper switch configurations caused the VHF voice link between the lunar module and command module to be interrupted temporarily during the Apollo 10, 12, and 15 missions. As soon as the improper switch configuration was identified, the voice link was restored.

Because the VHF ranging requirement was added to the system late in the development program, certain limitations were imposed on the system to keep design modifications to a minimum. One limitation, a time-sharing of voice and ranging tones, resulted in a certain amount of voice distortion during ranging operation. Also, it was necessary to preclude all conversation during ranging acquisition. Preflight briefings and laboratory demonstrations for each crew helped to prevent flight problems because of these limitations.

Two major problems were encountered in the flight performance of the steerable antenna. Several times during Apollo 14, the antenna dish experienced divergent oscillations. After a few seconds, the movement became too great for the antenna to remain locked on the up-link signal. Communications were then lost and the reacquisition procedure was required. Data from the Apollo 10, 11, 12, and 15 missions showed that a similar condition had existed, but to a much lesser degree. Many possible causes were investigated, including vehicle blockage of the signal, multipath reflections from the lunar surface, transmission of unwanted signals from the earth, and interference from other systems on the spacecraft. No conclusion was reached about the exact cause of the problem. With the exception of these auto-track losses, the tracking performance was excellent during all vehicle maneuvers. The second steerable antenna problem was experienced on Apollo 16. The mechanical drive mechanism was designed to be held in place with a locking pin that was electrically released during antenna activation. The locking pin did not release in the yaw axis and the antenna could not be used to track automatically.

Additional information on the design, development, and performance of the lunar module communications system is contained in references 4-55, 4-56, and 4-70 through 4-73.

4.6.11 Radar Systems

Two unique and independent radar systems provided guidance and navigation information to the guidance and control system during the lunar landing and rendezvous phases of the Apollo missions.

The landing radar system consisted of an antenna assembly and an electronic assembly which shared the processing of velocity sensor and altimeter data to measure lunar module velocity and range relative to the lunar surface. The Doppler principle was used for velocity determination; propagation time delay was used for slant range determination. To measure velocity, three beams of continuous microwave energy were transmitted to and reflected from the lunar surface. The

Doppler shifts along these beams were extracted by the velocity sensor. The slant range was obtained from a single beam of continuous microwave energy which was frequency-modulated by a linear sawtooth waveform. Comparison of the return signal with the transmitted modulation was made in the altimeter portion of the radar.

The rendezvous radar, located on the lunar module ascent stage, consisted of an antenna assembly and an electronics assembly. An active transponder was installed in the command and service module. The radar was a continuous-wave type, which operated in a beacon mode and acquired and tracked the transponder at ranges up to 400 miles. The radar provided precision range, range-rate, angle, and angle-rate data relative to the transponder. Range data were derived from the propagation delay of tones modulated on the transmitted carrier of the radar which was, in turn, received, filtered, remodulated, and retransmitted by the transponder and then received back at the radar. Range rate was determined from the two-way Doppler shift of the carrier frequency. Angle tracking of the transponder in azimuth and elevation was accomplished using an amplitude comparison technique.

The landing and rendezvous radar systems were the first all-solid-state radars to be designed for and flown in space. Sophisticated signal processing techniques were used in the rendezvous radar and transponder which minimized weight, size, and power requirements. (The radar and transponder met all the established performance requirements at the 400-mile range with only 300 milliwatts of radiated X-band power.) The unique requirements for environment, reliability, size, and weight led to the selection of "cordwood" construction (a multilayer circuit board design). However, this construction technique resulted in a number of development problems. Two significant problems were not identified until after production was initiated, and extensive replacement of electronic assemblies was required. These problems were (1) open circuits in interlayer columns of the rendezvous radar multilayer circuit boards at hot and cold temperature extremes and (2) cracked solder joints in the landing radar as a result of stress exerted on solder joints during thermal cycling.

Operational evaluation tests simulating lunar mission phases were performed to fully evaluate performance of the radars before the first lunar mission. These tests are discussed briefly in the following paragraphs.

Rendezvous radar flight testing was conducted to verify the capability of the radar to meet Apollo mission performance requirements. The objective of the tests was to verify that the tracking, ranging, and velocity loops of the rendezvous radar operated properly during a simulated lunar stay. A jet aircraft and a helicopter were used to fly the radar transponder, testing it against an instrumented ground-based lunar module radar at the White Sands Missile Range. The tests simulated several orientations along each of the probable lunar module rendezvous and lunar-orbit trajectories and demonstrated that the rendezvous radar performed within the required accuracy range at distances representative of the design range. The performance of the rendezvous radar/transponder link was evaluated at the maximum range during the Apollo 7 mission. The test conditions simulated the lunar stay phase of a lunar mission by acquiring and tracking the orbiting command and service module transponder with a ground-based radar to verify that the tracking, ranging, and velocity loops of the rendezvous radar and the tracking loops of the transponder functioned properly at the extreme limits of their capabilities. The rendezvous radar was activated for the first time in the space environment during the Apollo 9 mission. The accuracy of the rendezvous radar and the techniques for using it were verified by performing an active command module/lunar module rendezvous in earth orbit.

Landing radar flight testing was also conducted. The objectives of this testing were to (1) evaluate the performance of the landing radar under dynamic flight conditions, (2) verify the landing radar mathematical model, (3) evaluate the combined performance of the landing radar and the lunar module guidance computer, (4) verify the adequacy of the landing radar to meet mission requirements, and (5) define the constraints or necessary design changes. The tests were conducted (within the capabilities of the test aircraft) under flight conditions that simulated each of the probable lunar-descent trajectories.

Radio-frequency view factor testing was performed on the ground on a lunar module mockup to determine if any false lock-on effects would be caused by Doppler returns from lunar module structural vibrations during descent engine firings. The areas investigated were the lunar module legs, engine skirt, and bottom structure. The test results indicated that some degradation of landing radar performance had occurred. For this reason, the following changes were made to correct the problem.

a. The frequency response of the preamplifier was changed to decrease the landing radar sensitivity to low-frequency vibrations exhibited by the lunar module structure.

b. The antenna was rotated to prevent the landing radar beam from impinging on the lunar module leg structure.

c. A baffle was installed to shield the radar beams from descent engine bell reflections.

To test the lunar module landing radar in a space environment with the descent engine firing, special instrumentation was installed on the Apollo 9 lunar module to measure the signals in the velocity and altimeter preamplifier outputs. Following ignition of the descent engine, spurious signals appeared which were attributed to flaking of the Mylar thermal blanket. The problem was corrected by replacing the Mylar thermal blanket with an ablative paint on a portion of the descent stage.

Mission performance for the lunar module rendezvous and landing radar systems was satisfactory on all lunar Apollo missions. Velocity and range data were provided by the landing radar from the point of lock-on to touchdown. The rendezvous radar acquired the service module transponder at an average range of 130 miles.

Additional information on the development, testing, and flight performance of the landing and rendezvous radar systems is contained in reference 4-74.

4.6.12 Instrumentation System

The lunar module instrumentation system provided the measurements necessary to ascertain whether the vehicle systems were operating properly. These measurements consisted of pressure, temperature, voltage, quantity, and discrete (switch closure) measurements that were displayed to the crew on meters and transmitted to the ground over the communications link. The instrumentation system also provided onboard voice recording and caution and warning monitoring of parameters critical for crew safety. The equipment required to accomplish these functions included transducers (sensors), a signal conditioning electronics assembly, the pulse code modulation and timing electronics assembly mentioned in section 4.6.10, a data storage electronics assembly (voice recorder), and a caution and warning electronics assembly.

In developing the hardware, a primary requirement was not to interfere with the system being monitored. This requirement did not have much effect on measurement of physical parameters (such as pressure, temperature, and quantity) because a sealed probe compatible with the monitored substance was generally available. However, monitoring electrical parameters presented a problem. A failure in the measuring circuit could cause the measured circuit to become completely inoperative or could activate a circuit that was not supposed to be operating. To prevent these problems, large resistors and transformers were used in the interface circuits so that no instrumentation system failure could cause an unwanted voltage or produce a short circuit in the measured circuit.

Various test programs were conducted to eradicate weak components. Temperature and vibration tests appeared to be the most effective. Expansion from temperature changes and flexing from vibration caused weak solder joints, thin insulation, and weak components to fail during these tests rather than later during lunar module operation. This technique was fairly successful, but failures still occurred on the vehicle. One interesting point was that all of these failures occurred before 2000 hours of operation, whereas several units accrued 6000 hours of operating time before flight and never experienced additional failures.

The early decision to require a high-accuracy system meant that the entire system had to be optimized. However, two highly accurate items that were already available were (1) the signal conditioners that amplified the small electrical signal from the transducers to a standard 0- to 5-volt dc level, and (2) the pulse code modulation devices that converted the 0- to 5-volt dc analog signal to an eight-bit word.

The caution and warning electronics assembly was designed so that critical measurements could be monitored automatically, releasing the crew for other tasks. Pressure, temperature, and quantity levels were determined by the other subsystems and, if the measurements exceeded

predetermined levels, the caution and warning electronics assembly initiated a master alarm tone and a light identifying the affected system. When these levels were established, the system eccentricities were not all known, and many erroneous nuisance alarms were generated during normal operations. For instance, an alarm might be generated when a system was turned on. Even though only a short time elapsed (less than a second) before the system reached a normal operating range, the caution and warning electronics assembly would immediately detect an out-of-tolerance system. Alarms also were generated when other systems momentarily exceeded safe limits during switching to different modes of operation. Most of these nuisance alarms were corrected by placing time delays in the caution and warning electronics assembly circuits, which allowed the systems to reach or return to their normal operating levels in a reasonable time. A few nuisance alarms could not be eliminated without a great deal of expense. These occurred during system activations.

Although a few measurement problems and nuisance master alarms were experienced, the overall instrumentation system met all requirements.

A more detailed technical discussion of the lunar module instrumentation system is given in reference 4-75.

4.7 ADDITIONAL SPACECRAFT DEVELOPMENT CONSIDERATIONS

4.7.1 Introduction

Aspects of spacecraft systems development and performance which could not be conveniently discussed within the context of a specific spacecraft module are included here.

4.7.2 Electrical Wiring System

The electrical wiring system included the interconnecting wiring between the various system components, the associated electrical connectors and termination devices, and the required electrical harness support and protective hardware such as harness clamps and tubing. These items were established as a system to (1) provide management control over the types of hardware selected and the processes and procedures to be used, (2) facilitate understanding and assistance in the resolution of problems, and (3) provide management control for initiating or assisting in the development of new hardware or technology whenever necessary.

The design requirements for the command module and lunar module wiring and connecting devices were essentially the same. The wiring insulation was selected to withstand test voltages up to 1500 volts dc; the conductors were selected to conduct rated currents at temperatures up to 500° F without significant degradation of insulation characteristics. Extruded Teflon insulation with a wall thickness of 15 mils was used for the Block I command module wiring to provide protection against abrasion and damage during the fabrication and installation of harnesses. This type of insulation had been used successfully on many aircraft. Because of the emphasis on weight reduction, the Teflon wiring insulation for the Block II vehicles was changed to a 7-mil wall thickness, and a 1/2-mil polyamide dispersion coat was added for additional abrasion protection. This change resulted in a weight saving of approximately 500 pounds. Approximately 110 000 feet of wiring weighing nearly 1350 pounds was used in the Block II command and service module. The smallest wire used was 24 gage, and most of the conductors were nickel-plated copper.

Approximately 75 000 feet of wire weighing nearly 750 pounds was used in the lunar module. The wiring was silver-plated copper except for some of the minimum-size wire (26 gage), which was copper-chromium-constantan. The thin-wall insulation (7 mils) consisted of a tape-wrap construction which was covered with a 1/2-mil dispersion coat of Teflon. The tape was made up of a layer of polyamide bonded to one or more layers of Teflon. One tape was wrapped around the conductor in one direction with a 50-percent overlap; a second tape was wrapped in the opposite direction, also with a 50-percent overlap. These layers were bonded together by a heat sintering process and then covered with the Teflon dispersion coat. The dispersion coat sealed the exposed edges of the tape and provided a chemically resistant barrier to the polyamide, which

degraded when exposed to lunar module engine fuels. This coating provided additional abrasion resistance and a smooth outer surface for better environmental sealing in the grommet wire seals of connectors.

The connecting devices used on both the command module and lunar module were similar with a few exceptions. Most of the round connectors were of the bayonnet locking type, and individual environmental interfacial seals were incorporated for each connector contact. A one-piece silicone rubber seal was used at the wire-entry end of the connector to prevent contaminants from entering the connector and causing short circuits between contacts or wiring. As an added precaution, a silicone potting material was used in the lunar module connectors for additional environmental sealing at the wire-entry end. Some hermetically sealed connectors were required at the cabin pressure bulkheads. Most of these were rectangular and had a glass seal around each pin to prevent leakage of cabin pressure through the connector.

Connecting devices other than the aforementioned connectors were also used for interconnecting wiring between system components. On the command module, these devices consisted of modular terminal boards and crimp-type wire splices. The modular terminal board was basically a small rectangular block incorporating eight socket contacts that could be bussed together in various combinations. A mating pin was crimped onto a wire, and the pin was then inserted into the appropriate socket. The modular terminal board also had one-piece silicone rubber grommets that provided an environmental seal for each wire, similar to the wire grommet seal used on the command module and lunar module connectors.

For maximum wiring reliability, an early command module ground rule prohibited the use of wire splices; however, approximately 250 crimp splices were eventually used. No significant problems were encountered.

The modular terminal board was not used on the lunar module; however, both the solder-type and crimp-type wire splices were used. The early developmental vehicles had more than 4000 splices, but this number was finally reduced to approximately 1500. Generally, the solder splice was used for bench operations and the crimp splice for rework or vehicle installations.

Wiring harnesses and connecting devices do not generally appear to be fragile or easily damaged; however, discrepancies often occurred during fabrication and installation. The number of discrepancies had to be reduced to zero during the last stages of checkout before launch of the spacecraft. To help eliminate these discrepancies, specific fabrication, processing, handling, installation, and checkout techniques were developed. Fabrication and processing techniques included daily calibration of splice-crimping tools, and the development of potting and environmental sealing techniques, three-dimensional harness tooling boards, special harness handling fixtures, and special protective enclosures for unmated connectors. Protection for harnesses after installation in a vehicle included the use of special tubing and wire routing trays, chafe guards at sharp corners, and adherence to specific criteria for harness support and clamping. For checkout of wire harnesses, procedures were developed to make automated electrical measurements, which included conductor continuity, conductor resistance, and insulation dielectric strength. These measurements were made on the tooling board and again after installation in the vehicle to verify the integrity of the wiring in every harness.

Several significant wiring problems occurred during the Apollo program. Radial cracking of the polyamide dispersion coating on the command module wire insulation was determined to have resulted from an incomplete curing of this coating. A chemical test was developed to ensure the adequacy of the cure, and a large amount of unsatisfactory wire had to be removed from stock and from several spacecraft to eliminate the problem.

As a result of the Apollo I fire, numerous changes were made in the kinds, amounts, and temperature limitations of materials that could be used in the spacecraft. A maximum allowable temperature limit of 400° F was established for wiring insulation. To ensure that this limitation was not exceeded, an evaluation was made of all system circuitry to determine the adequacy of the related circuit breakers under worst-case short-circuit conditions. As a result of this evaluation, a number of wire and circuit breaker sizes were changed to maintain wire/circuit breaker compatibility.

Two problems occurred with the lunar module wiring. First, because the vendor had changed the amount of carbon in the black-colored wire insulation, the resistance of the insulation was decreased from more than 100 megohms to as low as 5 megohms. Under certain conditions, this change could have affected instrumentation measurements or given a false caution and warning signal. Although a critical review of the circuits where this wiring was used determined that a failure would not affect crew safety or mission success, the method of checking insulation resistance in acceptance testing was changed from spot checking to 100-percent testing. As a result of the change, a large amount of unsatisfactory wiring was located and returned to the vendor. The second problem concerned the use of small-gage wire. A large amount of silver-plated-copper 26-gage wire was used, mainly for instrumentation purposes, on the first three lunar module development vehicles. Because of handling problems and the considerable rework that was required, breakage of this wire became a significant problem. To alleviate the problem, 22-gage wire was specified as the smallest wire for use on control and display panels of subsequent vehicles. For the balance of the 26-gage wire applications, the wire material was changed to a copper-chromium-constantan high-strength alloy. Wire breakage, although not completely eliminated, was reduced to a more acceptable level.

A considerable number of problems with connectors on both the command module and lunar module was caused mainly by bent pins, recessed contacts, and damaged environmental seals. To combat these problems, more effective procedures were developed for assembly and handling, protective features were incorporated, and additional inspection points were used during fabrication and installation. Specific improvements also resulted from more extensive use of pictorial aids in training and the introduction of a quality awareness program. The overall result was a substantial reduction of discrepancies.

In the early lunar module vehicles, wire splices became a considerable problem, mainly because of the failure of many solder splices during qualification. Unfortunately, a large number of the faulty splices was contained in harnesses already installed on the spacecraft. Faulty splices were caused by underheating, which often produced cold solder joints, or overheating, which caused wicking of excessive solder into the wire and resulted in insufficient solder to adequately hold the wires together. Development of the aforementioned fabrication techniques and more exacting inspection criteria virtually eliminated the problem on later vehicles.

The use of modular terminal boards became a problem on early Block II command modules. The dimensional tolerances between many of the detailed parts that made up the modular terminal board were excessive. An out-of-tolerance condition accumulated from parts that were, individually, within acceptable limits. This deficiency was not noted in time to preclude installation of defective boards on several spacecraft. In many cases, the out-of-tolerance condition resulted in intermittent contact or no contact between an inserted pin and the mating socket contact. A critical evalation of the circuits for which the modular terminal boards were used revealed that, in some cases, a failure could affect crew safety or mission success. Consequently, a number of modular terminal boards were removed and replaced with components of known quality. Several anomalies are known to have been caused by faulty modular terminal boards, but because of criteria established for circuit evaluation, crew safety or mission success was not jeopardized.

A more complete discussion of the electrical wiring system is given in reference 4-76.

4.7.3 Pyrotechnic Devices

The most significant decisions concerning pyrotechnic devices were made very early in the Apollo spacecraft program. These decisions were (1) to develop a single, standard, separable electroexplosive device as a small, common-use item for initiation of all pyrotechnic functions and (2) to use booster modules into which the standard electroexplosive device would be installed and sealed to provide both general- and special-purpose cartridge assemblies for a wide variety of pyrotechnic functions.

Initially, the standard electroexplosive device, designated as the Apollo standard initiator, provided dual-bridgewire circuits for redundancy. Later, as the spacecraft pyrotechnic system designs matured, one bridgewire was found to be adequate. Other highly significant improvements were incorporated, and the resulting configuration was redesignated as the single-bridgewire Apollo standard initiator. About 25 000 dual-bridgewire Apollo standard initiators were manufactured and used without any known failures attributable to the device; about 9000 single-bridgwire Apollo standard initiators were also used in the Apollo spacecraft program with equally successful results.

By the end of the Apollo program, pyrotechnic systems and devices performed a wide variety of critical functions. Typical functions and the devices used to accomplish them are described in reference 4-77.

In general, a serial-qualification test program was followed for each pyrotechnic system; that is, the components were qualified first, the devices next, then the assemblies, and finally, the complete functional system.

Additional information on Apollo pyrotechnics experience may be found in reference 4-77.

4.7.4 Sequencing System

The spacecraft sequencing system is the system that provided the automatic timing and control of the pyrotechnic devices used to separate spacecraft stages, fire mortars for deploying parachutes, fire pyrotechnic propellant valves, and perform mission aborts.

The function performed by the sequencing system on the AS-101 and AS-102 flights (boilerplates 13 and 15) was to initiate jettisoning of the launch escape tower. The sequencing system for these early research and development flights utilized motor switches for the pyrotechnic firing output circuits and solid-state circuitry for the timing and control. Motor switches were chosen for output devices because of their insensitivity to vibration and high power switching capability. Solid-state control devices were chosen because of their small volume, light weight and low power requirements.

Failures occurred during the early preflight testing of the solid-state sequencer that resulted in premature operation. Consequently, a relay was added to apply power to the sequencer only when the launch escape tower was to be jettisoned. Because of the test failures and numerous single-point failures, the solid-state sequencer was redesigned to eliminate the single-point failure modes, and the solid-state logic was replaced with relay logic. Relays were also used in place of motor switches because of problems experienced with motor switches during thermal testing. The redesigned sequencer was used on the PA-1, A-001, and A-002 flights (boilerplates 6, 12, and 23) launched from the White Sands Missile Range to test the spacecraft abort and parachute systems. The sequencing system (redundant A and B systems) for these flights consisted of a mission sequencer, an abort backup timer, two earth landing sequence controllers (used to sequence parachute deployment), two tower sequencers, and four silver-zinc batteries (two pyrotechnic and two logic batteries).

During a design review of the operational sequencing system, single-point failure modes were found to exist in the earth landing sequence controllers being built by the parachute contractor. Because eliminating these failure modes would severely impact cost and schedule, a design change was implemented so that pyrotechnic power would not be applied to the earth landing sequence controllers until the time for jettisoning of the forward heat shield. This design was flown on the A-003, PA-2, and A-004 flights (boilerplates 22 and 23A and airframe 002).

The sequencing system for Block I and Block II command and service modules consisted of two redundant systems with two master event sequence controllers, two service module jettison controllers, two reaction control system controllers, two earth landing sequence controllers, and a pyrotechnic continuity verification box. The system was powered by two 3/4-ampere-hour silver-zinc batteries for pyrotechnic functions, and two 40-ampere-hour silver-zinc entry batteries supplied power for logic and bus 1 and 3 of the emergency detection system. A third entry battery powered emergency detection system bus 2. (The emergency detection system is discussed in section 4.7.6.)

During checkout of airframe 009 for the AS-201 flight, a main parachute deploy relay contact in the earth landing sequence controller welded closed due to an overload. Because of this failure, the pyrotechnic simulator and the sequencing system circuitry were modified to prevent overloading. For this modification, series relays were added to the pyrotechnic continuity verification box to eliminate the earth landing sequence controller single-point failure modes and to do away with the need to delay powering of the earth landing sequence controller pyrotechnic bus. The new design was flown on all subsequent spacecraft.

During the AS-201 flight, a spare wire that went through the command and service module umbilical without being deadfaced, shorted during entry. This wire was connected to the arming circuit breaker of the sequencing system; the short opened the circuit breaker and removed power from sequencing system B. Although the remaining system A successfully performed the required earth landing and postlanding functions, this event indicated the requirement to have separate and isolated systems for redundancy.

Two lunar docking event controllers and two lunar module/adapter separation controllers were added to the Block II system to perform the lunar mission functions. Also, the reaction control system controller was redesigned to fit in the aft compartment to allow accessibility to the controller without removing the aft heat shield on the Block II command module. Because of the smaller volume available, the redundant circuits were put into one controller box rather than having two separate boxes.

Another change to the sequential events control system was made because the mission requirements specified that the lunar module crewmen should be able to dock with the command and service module without assistance from the Command Module Pilot. For this operation, the pyrotechnic bus had to remain armed from the time of undocking until redocking after lunar module ascent from the moon. Therefore, to save battery power and still have the panel toggle switch remain in the activated position, motor switches, rather than relays, were used to arm the pyrotechnic bus.

In reviewing the sequencing system before the Apollo 11 mission, two single-point failure modes were identified that could have caused a mission abort. Two emergency detection system abort signals were passed through the same electrical connector, and two booster-engine cutoff commands went through another single connector on the master events sequence controller. Although a change had been made on the Block I command and service module to eliminate these failure modes, the change had not been carried over to the Block II command and service module. The corrective action was to safety-wire the connectors on the Apollo 11 and 12 spacecraft; on subsequent spacecraft, the functions were routed through separate connectors.

A review of crew safety switching functions (explosive device and engine firing functions) on the lunar module identified four single-point failure sources in the engine firing circuitry that could have inadvertently shut down the descent engine: (1) a relay in the stabilization and control assembly, (2) the engine stop pushbutton switches, (3) the abort stage pushbutton switch, and (4) the engine arm toggle switch. Also, the plus-X translation pushbutton switch was a single-point failure source for firing the reaction control system engines. All of these potential failure sources were eliminated by wiring the switch contacts in series.

After the postflight investigation of the problems encountered with the docking system during the Apollo 14 mission, a recommended backup method of docking was provided for Apollo 15 and subsequent flights. A cable was connected to the lunar docking events controller ground support equipment connector in the command module, which would allow power to be applied to the docking probe retract mechanism. Thus, the probe could be retracted and docking would be possible, even if the capture latches on the docking probe did not work.

An emergency cable also was made for the lunar module that would apply power directly to the ascent engine valves if the engine failed to start by either the automatic or the manual firing paths. This cable could also apply power to the explosive devices box through the ground support equipment connector if the explosive devices batteries or arming relays failed. Unlike the command and service module, normal switching of other spacecraft batteries to the explosive devices bus could not be accomplished.

Additional sequencing system functions were used for the J-series missions to jettison the scientific instrument module bay door, to launch the subsatellite, and to jettison the high-frequency antennas. The relays for performing these functions were incorporated into the multiple operations module box.

Reference 4-78 gives a more detailed technical discussion of the sequencing system.

4.7.5 Optical and Visual Aids

Optical and visual aids were developed to enable the Apollo crewmen to rendezvous and dock and to increase the precision of lunar landings.

The rendezvous and docking aids were required to furnish the following visual cues to the crewmen.

a. Visual acquisition and gross attitude determination at a minimum distance of 1000 feet

b. Indication of relative attitude and alignment from a minimum distance of 200 feet

c. Range and range-rate information from a minimum distance of 200 feet

d. Indication of fine alignment from a distance of approximately 50 feet to the precontact alignment position

Devices were incorporated in the command and service module and in the lunar module to meet these requirements. Tracking and running lights were provided for visual acquisition and tracking, and optical aids were provided for spacecraft alignment.

The primary docking aid was the crewman optical alignment sight, a collimator device that consisted of a lamp with an intensity control, a reticle, a barrel-shaped housing and mounting track, a combiner glass, and a power receptacle. The reticle had vertical and horizontal 10-degree graduations in a 10-degree segment of the circular combiner glass and an elevation scale of minus 10 degrees to plus 31.5 degrees. The crewman optical alignment sight was focused at infinity so that the reticle image appeared to be superimposed on the docking target located on the other spacecraft.

The lunar module was originally planned to be the active vehicle during docking after ascent from the lunar surface. In the first lunar module design, the forward hatch was also to be the docking port. No auxiliary alignment devices were to be provided aboard the lunar module because the forward hatch was visible to the lunar module crewmen, who could directly observe the docking operation. However, during lunar module development, the forward hatch was enlarged and the shape was changed. The overhead hatch, not directly visible to either of the lunar module crewmen, became the docking port. This necessitated the addition of an alignment device.

For a command-module-active docking, a docking target mounted on the lunar module provided pitch, yaw, and roll alignment. For a lunar-module-active docking operation, a docking target was installed in the right-hand rendezvous window of the command module.

During the transposition and docking phase of an Apollo mission, the command and service module separated from the spacecraft/lunar module adapter and S-IVB, translated forward 100 to 150 feet, pitched 180 degrees, rolled 60 degrees, and translated toward the lunar module for docking. If the translation and docking had to be accomplished in the dark, it was necessary to light the lunar module. This was accomplished using a spotlight mounted on the command and service module.

Both electronic and visual aids were provided for the lunar rendezvous and docking phase of a mission. Range and range-rate data were provided by the rendezvous radar previously discussed in section 4.6.11. A high-intensity tracking light on the lunar module ascent stage permitted visual tracking from the command module and a flashing rendezvous beacon on the side of the service module permitted visual tracking from the lunar module. The lunar module crewmen performed a gross attitude determination at a distance of approximately 2000 feet after command and service module acquisition. This was achieved by viewing the running lights on the service module exterior.

The rendezvous and docking aids performed well during Apollo missions 9 through 17. However, during the Apollo 9 lunar-module-active rendezvous and docking, reflected light caused the lunar module crewman optical alignment sight reticle image to wash out (ref. 4-15). The problem was solved by removing the internal neutral density filter in the alignment sight and replacing it with an external removable filter.

A landing point designator consisting of scales etched on the inner and outer panes of the Commander's window in the lunar module was used in conjunction with hand controller inputs to the guidance and navigation system to redesignate the computer-stored landing point. After pitch-over in the landing sequence, the Commander could see whether or not preselected landmarks were in the proper relationship to the window marks, and thus estimate the direction and magnitude of the correction required to effect a landing in the desired area. The capability to manually redesignate the landing point also permitted the Commander to avoid an unexpected obstacle if necessary, thus increasing the margin of safety. Redesignations were made as early as possible during the landing sequence to conserve propellant.

4.7.6 Emergency Detection System

The emergency detection system sensed launch vehicle emergency conditions. Parameters sensed included angular rates, guidance platform failure, engine thrust, stage separation, and angle of attack. Displays of emergency conditions would have provided the crew with the information for determining the necessity for abort action from lift-off through separation from the S-IVB stage; however, provisions were also made for initiation of abort automatically during first-stage boost in the event of extremely time-critical emergencies. Concurrent with abort initiation, the active engines of the launch vehicle would have been shut down to insure safe separation of the spacecraft from the launch vehicle. In addition, the crew could have been requested by ground personnel to manually initiate an abort independently of the sensing parameters of the emergency detection system. Signals originating from either the Launch Control Center or the Mission Control Center would have illuminated an abort light in the crew station to indicate a requested abort. The technique selected for enabling the automatic abort system for flight provided for crew selection of the automatic mode prior to launch followed by automatic enabling in two steps at lift-off. The two final inputs were (1) the commit command from launch vehicle ground support equipment and (2) the separation of the instrument unit umbilical.

The first two Saturn V flights (unmanned) qualified the emergency detection system for use with the large launch vehicle. The system was satisfactorily tested with the automatic abort capability disabled on the Apollo 4 flight. The Apollo 6 spacecraft was flown with the automatic abort capability enabled.

Critical analysis of Saturn V malfunctions in the high-dynamic-pressure region in mid-1967 led to a recommendation that the Saturn guidance platform be backed up during first-stage flight to ensure a safe abort from platform failures. Two approaches considered were:

a. Integration of the launch vehicle rate gyro output

b. Implementation of a spacecraft guidance system interface to the launch vehicle flight control computer

The latter approach had been shelved earlier because of the anticipated difficulty of filtering the effects of vehicle dynamics; however, additional studies indicated that the approach was feasible. NASA management thereafter approved the implementation of spacecraft guidance to the time of earth orbit for the Apollo 10 mission and through translunar injection for Apollo 11 and subsequent missions.

The emergency detection system performed as designed on all manned missions.

4.7.7 Development Flight Instrumentation

Development flight instrumentation systems were used to acquire spacecraft flight performance data during the development phase of the Apollo program. Complete systems were furnished for 25 vehicles; however, only 18 systems were actually flown on missions. The remaining seven were used in ground test vehicles or were reassigned for use as spares because of program changes. In several applications, partial development flight instrumentation systems augmented the operational instrumentation systems discussed in sections 4.4.12 and 4.6.12. High reliability and flexibility of use characterized the development flight instrumentation systems. Some of the major factors in obtaining these benefits are discussed.

The peak environmental test levels used in qualification testing were founded on values above the maximum design limits; that is, the levels exceeded any level expected in any vehicle area that might contain development flight instrumentation equipment. This was a major difference between the development flight instrumentation and operational instrumentation qualification philosophy. Most development flight instrumentation components were qualified at a single maximum level, whereas the operational instrumentation system components were tailored for specific environmental zones within the vehicles. The standardized concept was used on the development flight instrumentation to ensure that most equipment could be used in any part of a vehicle without requiring different or additional qualification testing. The use of this concept not only permitted general flexibility in mounting equipment but also simplified procedures, procurement, and paperwork.

Flexibility in accomodating variations in quantity and types of measurements was obtained by using a building-block approach. A system was designed that was basically common to all spacecraft, a maximum degree of standardization was used for component input/output characteristics and test procedures, and programmable signal conditioning units were used. Measurement changes were sometimes implemented on flight vehicles within a matter of hours following a new requirement. Some small systems were designed, qualified, and installed within a period of 3 months.

The control, power wiring, and calibration functions of the development flight instrumentation systems were generally independent of other onboard systems. Because of this independence, development flight instrumentation modifications (particularly late ones) could be implemented with little or no impact on the vehicle operational systems. Also, the development flight instrumentation could be checked out without disturbing other systems. Unscheduled vehicle downtime was frequently used for additional testing of the development flight instrumentation because of its overall independence of operation. The instrumentation could be quickly energized and checked with its own support equipment. Consequently, testing of the development flight instrumentation was easily dovetailed into the vehicle master test plans and provided a convenient means for schedule optimization during the vehicle test operations at the prime contractor plants.

Further details of the design, development and use of the development flight instrumentation are given in reference 4-79.

4.7.8 Fracture Control

Stress-corrosion cracking can occur in certain metal alloys when they are simultaneously exposed to a corrosive environment and an appreciable, continuous, tensile stress. A number of structural failures due to stress-corrosion cracking occurred during ground testing of Apollo hardware. Problems encountered with lunar module structural components are discussed in section 4.6.2 and in reference 4-59.

The problem of stress-corrosion cracking in pressure vessels is especially serious because it can result in catastrophic failure of the vessel and damage to hardware near the vessel. In 1965, several titanium pressure vessels containing the propellant nitrogen tetroxide failed in pressure-hold tests. In late 1966, two titanium pressure vessels containing methanol failed. (Methanol is substituted for the propellant Aerozine-50 for test purposes.) In early 1967, two launch escape system steel rocket motor cases failed during acceptance tests. These failures occurred even with rigorous control of materials and fabrication processes. Investigation showed that crack-like flaws had started and grown under test conditions, or that flaws were in existence under actual use conditions and had grown.

The concepts of linear-elastic fracture mechanics were used in late 1966 to examine the relationship between potential flaw sizes in a pressure vessel and the subsequent crack growth possible with different fluids and environments. This examination showed that the sensitivity of a flawed material to existing Apollo pressure vessel environments varied greatly. Methanol and "white" nitrogen tetroxide were particularly aggressive to titanium. Untreated water was found to be very aggressive to certain types of steel.

By the end of 1967, a program was in effect to eliminate compatibility-related failures. As a result, three fluids were restricted from use - methanol, "white" nitrogen tetroxide, and trichloromonofluoromethane. In addition to the restricted use of fluids, the use of Apollo pressure vessels was controlled so that the "compatibility threshold" would not be exceeded for any environment to which the vessels would be subjected. This was accomplished by controlling the number of pressure cycles, the temperature during pressurization, and the fluids used.

Details concerning the problems experienced, the application of fracture mechanics criteria, and a description of the control program for Apollo pressure vessels are presented in reference 4-81.

4.8 LUNAR SURFACE MOBILITY

4.8.1 Modular Equipment Transporter

To obtain the maximum possible return of data and samples before the lunar roving vehicle became operational, an interim mobility device called the modular equipment transporter was developed. The modular equipment transporter, shown in figure 4-22, was a two-wheeled tubular-aluminum cart which could be folded for stowage in the modular equipment stowage assembly of the lunar module descent stage. Although the unloaded transporter weighed only 30 pounds, it was capable of carrying 360 pounds; however, the actual load was much lighter. The low temperature limit to which the tires were designed (-70° F) required the use of a special synthetic rubber for both tires and tubes.

The transporter was used only on the Apollo 14 mission and it permitted the range of the lunar surface traverse to be increased beyond that of the previous lunar landing missions. The device was designed to be pulled behind a crewman and it could carry various items of equipment for lunar surface exploration as well as lunar samples. The items of equipment included cameras, geological sampling tools and bags, and a portable magnetometer experiment. The transporter also served as a mobile workbench.

Since constant gripping of the pulling handle against the suit pressure would have tired the hand and arm muscles of the crewmen, the handle was designed to permit control of the transporter without requiring constant gripping. A triangular shape was used. The base of the triangle was long enough for insertion of the hand but the dimension perpendicular to the base was shorter than the width of the hand. Rotation of the hand toward the shorter dimension applied sufficient pressure for pulling and rotational control.

The transporter was stable, easily pulled, and proved to be very advantageous for both extravehicular activities on the Apollo 14 mission. Only at maximum speeds did the transporter evidence any instability and, then, only because of rough terrain. The instability was easy to control by hand motion.

4.8.2 Lunar Roving Vehicle

The lunar roving vehicle (fig. 4-23), used for the three extended-stay lunar missions, was a four-wheeled manually-controlled, electrically-powered vehicle that carried the crew and their science equipment over the lunar surface. The increased mobility and ease of travel made possible by this vehicle permitted the crew to travel much greater distances than on previous lunar landing missions. The vehicle was designed to carry the two crewmen and a science payload at a maximum velocity of approximately 16 kilometers per hour on a smooth, level surface, and at reduced velocities on slopes up to 25 degrees. It could be operated by either crewman from a control and display console located on the vehicle centerline. The deployed vehicle was approximately 10 feet long, 7 feet wide and 45 inches high. The chassis was hinged such that the forward and aft sections folded back over the center portion, and each wheel suspension system rotated so that the folded vehicle would fit in quadrant I of the lunar module descent stage for transport to the moon. The gross operational weight ranged from approximately 1530 pounds to 1600 pounds, of which 450 pounds was the weight of the vehicle itself and the remainder was the weight of the crewmen, tools, communications equipment, and the science payload.

The wheels had open-mesh tires with chevron tread covering 50 percent of the surface contact area. A separate traction drive consisting of a harmonic-drive reduction unit, drive motor, and brake assembly was provided for each wheel. A decoupling mechanism permitted each wheel to be decoupled from the traction drive, allowing any wheel to "free-wheel." An odometer on each traction drive transmitted pulses to a navigation signal processing unit. The harmonic drive reduced the motor speed and allowed continuous application of torque to the wheels at all speeds

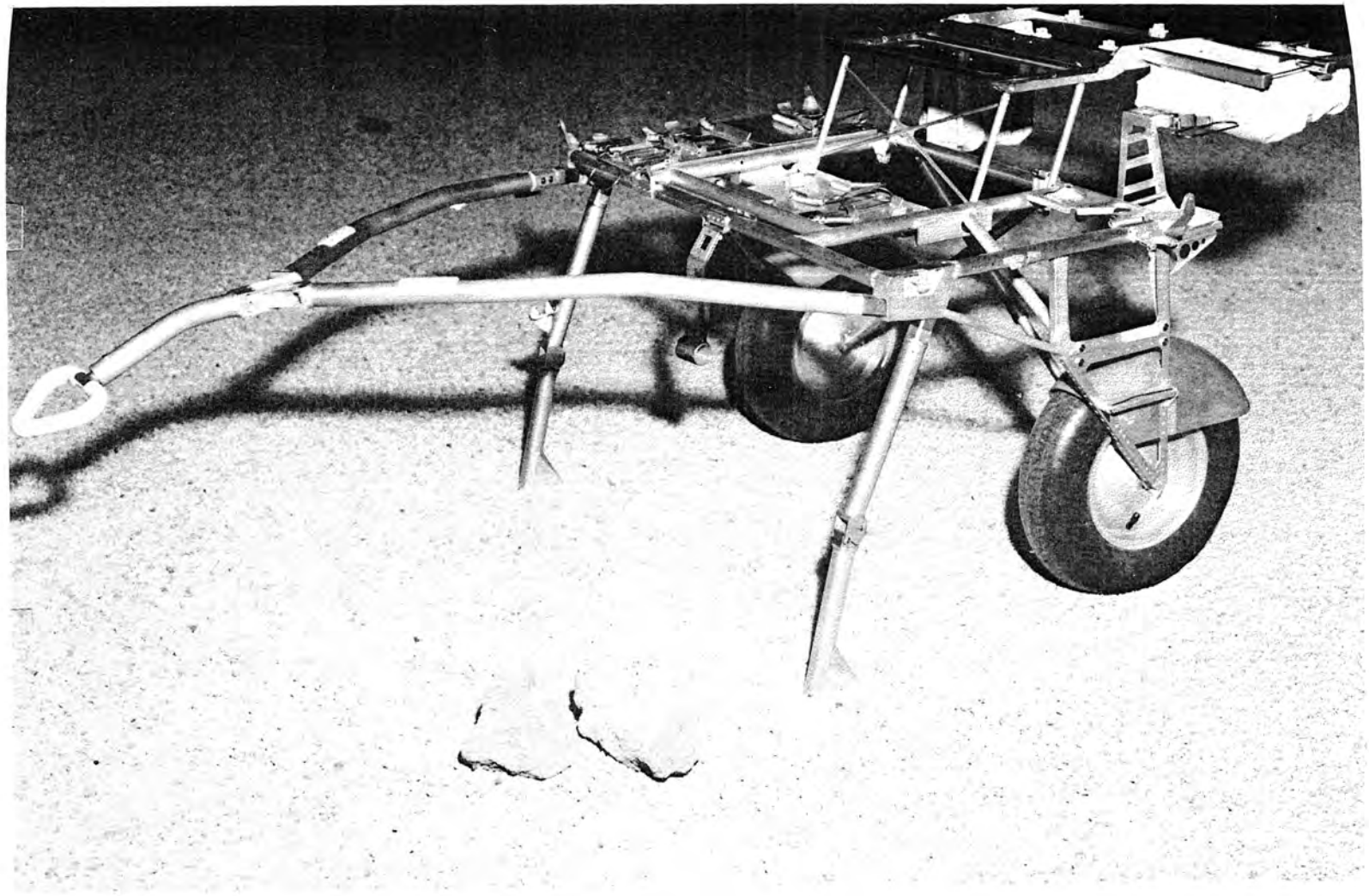

Figure 4-22.- Modular equipment transporter.

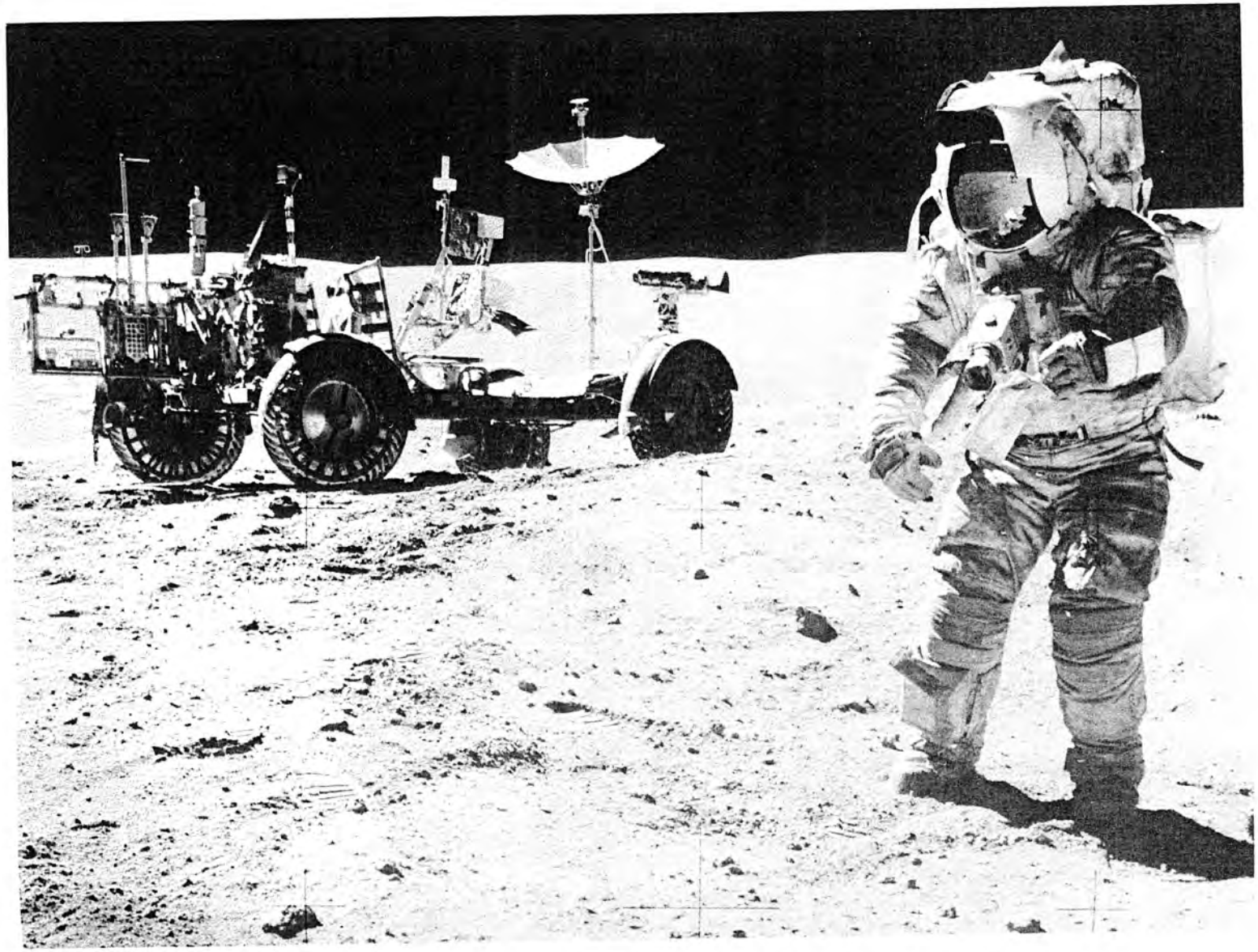

Figure 4-23.- View of Apollo 16 lunar roving vehicle and crewman.

without requiring gear shifting. Speed control for the motors was furnished by pulse-width modulation from the drive controller electronic package. The motors were instrumented for thermal monitoring and the temperatures were displayed on the control and display panel.

Steering was accomplished by two electrically driven rack and pinion assemblies with each assembly steering a pair of wheels. Simultaneous use of both front and rear wheel steering resulted in a minimum turning radius of 122 inches. Steering was controlled by moving the hand controller left or right from the neutral position. This operation energized the separate electric motors, and through a servo system, provided a steering angle proportional to the position of the hand controller. The front and rear steering assemblies were electrically and mechanically independent of each other. In the event of a malfunction, steering linkages could be disengaged and the wheels centered and locked so that operations could continue by using the remaining active steering assembly.

Speed control was maintained by the hand controller. Forward movement proportionately increased the forward speed. To operate the vehicle in reverse, the hand controller was pivoted rearward. However, before changing forward or reverse directions, the vehicle had to be brought to a full stop before a commanded direction change could be made. Braking was initiated in either forward or reverse by pivoting the hand controller rearward about the brake pivot point. Each wheel was braked by conventional brake shoes driven by the mechanical rotation of a cam in response to the hand controller.

The vehicle was powered by two 36-volt silver-zinc batteries, each having a capacity of 120 ampere-hours. During lunar surface operations, both batteries were normally used simultaneously on an approximate equal load basis. The batteries were located on the forward chassis and were enclosed by a thermal blanket and dust covers. The batteries were monitored for temperature, voltage, output current, and remaining ampere-hours by means of displays on the control and display panel. The circuitry was designed so that if one battery failed, the entire electrical load could be switched to the remaining battery.

The control and display console was separated into two main functional parts: navigation on the upper part and monitoring controls on the lower part. Navigation displays included pitch, roll, speed, heading, total distance traveled, as well as the range and bearing back to the lunar module. Heading was obtained from a sun-aligned directional gyro, speed and distance from wheel rotation counters, and range and bearing were computed from these inputs. Alignment of the directional gyro was accomplished by relaying pitch, roll, and sun angle readings to earth where an initial heading angle was calculated. The gyro was then adjusted by slewing with the torquing switch until the heading indicator read the same as the calculated value.

Thermal control devices were incorporated into the vehicle to maintain temperature sensitive components within the necessary temperature limits. The thermal devices consisted of special surface finishes, multilayer insulation, space radiators, surface mirrors, thermal straps, and fusible mass heat sinks. The basic concept of thermal control for the forward chassis components was to store energy during operation and to transfer energy to deep space while the vehicle was parked between extravehicular activities. The space radiators were mounted on the top of the signal processing unit, on the drive control electronics, and on the two batteries.

The mission performance of the lunar roving vehicles used on the Apollo 15, 16 and 17 missions was excellent. The vehicles significantly increased the capability to explore and enhanced data return. Performance data for the three vehicles are given in table 4-IX. Several of the minor problems encountered during lunar surface operations are discussed in the following paragraphs.

4.8.2.1 Apollo 15.- After lunar module ascent, the video signal was lost from the lunar surface television camera mounted on the lunar roving vehicle. Postflight analysis and ground tests showed that the loss had probably been caused by opening of the auxiliary power circuit breaker under combined electrical and thermal loads. For the Apollo 16 and 17 missions, the auxiliary circuit breaker capacity was increased from 7.5 to 10 amperes, and a switch was added so that the circuit breaker could be bypassed at the end of the final extravehicular activity, preventing loss of power after lunar module ascent. Further details of the Apollo 15 lunar roving vehicle performance are given in reference 4-21.

TABLE 4-IX.- LUNAR ROVING VEHICLE PERFORMANCE

Values	Apollo 15	Apollo 16	Apollo 17
Drive time, hr:min	03:02	03:26	04:29
Surface distance traveled, km . . .	27.9	26.7	33.8
Extravehicular activity duration, hr:min	[a]18:35	20:14	22:04
Average speed, km/hr	9.2	7.7	7.6
Energy rate, A-h/km (lunar roving vehicle only)	1.9	2.1	1.64
Ampere-hours consumed (242 available)	52.0	88.7	73.4
Navigation closure error, km	0.1	0	0
Number of navigation updates	1	0	0
[b]Maximum range from lunar module, km	∿4.4	∿4.6	∿7.3
Longest extravehicular activity traverse, km	12.5	11.4	18.9

[a]Does not include standup extravehicular activity time of 33 minutes 7 seconds.

[b]Map distance measured radially.

4.8.2.2 Apollo 16.- The significant problems that occurred during the Apollo 16 mission were:

a. The rear steering was temporarily lost.

b. Meters gave anomalous indications.

c. A rear fender extension was lost.

The rear steering was inoperative after initial powerup of the vehicle. However, the next time the vehicle was driven, both front and rear steering were operative. No corrective action was taken because the problem could not be isolated and the vehicle design and testing were considered adequate.

Anomalous electrical system meter indications were noted at initial powerup of the vehicle and during the second and third extravehicular activities. No single cause could be postulated to explain all of the indications. Since the cause could not be determined, no corrective action was taken for the Apollo 17 lunar roving vehicle.

On the second traverse, the attitude indicator pitch scale fell off but the needle could still be used to estimate pitch attitudes. Also, incorrect matching of switches caused removal of drive power from a pair of wheels and a resultant loss of navigation displays. This problem cleared when the normal switch configuration was restored.

The right rear fender extension was knocked off during the second traverse. As a result, a great deal of dust was thrown over the top of the vehicle, showering the crew and the vehicle during the remainder of the lunar surface activities. Corrective action for Apollo 17 consisted of adding fender extension stops to each fender. Additional details of mission performance are given in reference 4-22.

4.8.2.3 Apollo 17.- At initial powerup, the lunar roving vehicle battery temperatures were higher than predicted. This was partially due to the translunar attitude profile flown and partially to a bias in the battery temperature meter. Following adequate battery cooldown after the first extravehicular activity, temperatures for the remainder of the lunar surface operations were about as predicted.

The significant problems that occurred during the mission were:

a. The battery 2 temperature indication was off-scale low.

b. The right rear fender extension was broken off.

The off-scale battery 2 temperature indication was noted at the beginning of the third extravehicular activity and the condition continued for the remainder of the lunar surface operations. The most probable cause was a shorted thermistor in the battery. The same condition was noted on ground testing of two other batteries.

The right rear fender extension was accidentally knocked off at the lunar module site during the first extravehicular activity. The fender extension was replaced and taped into position, but the extension was lost after about an hour's driving. Prior to the second extravehicular activity, a temporary fender was successfully improvised from maps and clamped into position. Further details on the performance of the Apollo 17 lunar roving vehicle are given in reference 4-23.

4.9 LUNAR SURFACE COMMUNICATIONS

4.9.1 Introduction

The lunar surface communications system, as flown on the final three missions, consisted of (1) an extravehicular communications unit in each of the two lunar surface crewmen's backpacks, (2) a lunar communications relay unit on the lunar roving vehicle, and (3) a ground-commanded television assembly on the lunar roving vehicle.

Earlier system configurations were less complex. In the initial concept, the extravehicular and lunar module communications systems were to support a single extravehicular crewman with the second crewman remaining in the lunar module connected to the lunar module communications system. However, as the result of the decision to perform a two-man extravehicular activity, a new extravehicular communications system was developed, without modification to the lunar module, wherein the Lunar Module Pilot's voice and telemetry data were combined with the Commander's voice and telemetry data and transmitted as a composite signal to the lunar module. The composite signal was then relayed to the earth.

The development of the lunar roving vehicle meant that the crew would have the capability of going beyond the range of reliable radio communications if the existing communications system were used. Therefore, a lunar communications relay unit was provided on the lunar roving vehicle that operated independently of the lunar module.

Television camera equipment used to provide live coverage of lunar surface extravehicular activity underwent several changes during the Apollo program. On the Apollo 11 mission, a black-and-white slow-scan camera was mounted in the lunar module descent stage and was energized from the lunar module cabin to obtain coverage of the Commander descending the ladder and stepping onto the lunar surface. Subsequently, this camera was mounted on a tripod to monitor the extravehicular activities. On Apollo 12 and subsequent missions, the black-and-white camera was replaced with a color camera modified for operation on the lunar surface. Beginning with Apollo 15, a ground-commanded color television camera was mounted on the lunar roving vehicle. The lunar-communications relay unit transmitted the video signal to the earth and received commands from the earth for control of camera pointing and light settings.

4.9.2 Extravehicular Communications Unit

On the Apollo 11, 12, and 14 missions, the extravehicular communications units transmitted voice and telemetry data from the crew to the lunar module in VHF ranges. The signal was retransmitted to earth through the lunar module S-band communications link as shown in figure 4-24. Conversely, voice communications from earth were received by the lunar module on the S-band equipment and retransmitted to the crew on the VHF equipment. The small power output of the transmitters in the extravehicular communications units limited lunar exploration travel to line-of-sight distances (less than 2.5 miles from the lunar module).

The extravehicular communications unit was required to fit into a 5-cubic-inch volume that was available in the portable life support system. Therefore, minimizing the physical size of the unit was important. Standard miniaturization techniques served for the transmitters, receivers, and signal processors; but the triplexer, which allowed a single antenna to be used on three frequencies by three devices at one time, required extensive design effort to fit the unit within the available space.

The extravehicular communications units were used on the six Apollo lunar landing missions, and the units operated satisfactorily. The quality of the voice transmission permitted identification of the crewmen, and the accuracy of telemetry data transmission allowed precise monitoring of life support functions.

4.9.3 Lunar Communications Relay Unit

The lunar communications relay unit was developed for the Apollo 15, 16, and 17 missions. The unit was made up of four major components: an electronics assembly that contained radio transmitters and receivers, a battery, a low-gain antenna, and a high-gain antenna. This equipment was stowed in the lunar module until the lunar roving vehicle was deployed. The crew then installed the system on the lunar roving vehicle. The electronics assembly was 22 by 16 by 6 inches in size and weighed 54 pounds. Power for the electronics assembly was supplied by a 29-volt battery that was installed by a crewman. However, provisions were also made to use the lunar roving vehicle batteries as an alternate power source. The low-gain and high-gain antennas were installed on the lunar roving vehicle and connected to the electronics assembly by the crew. The low-gain antenna was used for earth voice/data transmission when the lunar roving vehicle was in motion. The high-gain antenna was accurately pointed to earth manually when the lunar roving vehicle was stopped so that television signals could be transmitted to earth. The system capabilities are shown in figure 4-25.

C-4

ORIGINAL PAGE IS
OF POOR QUALITY

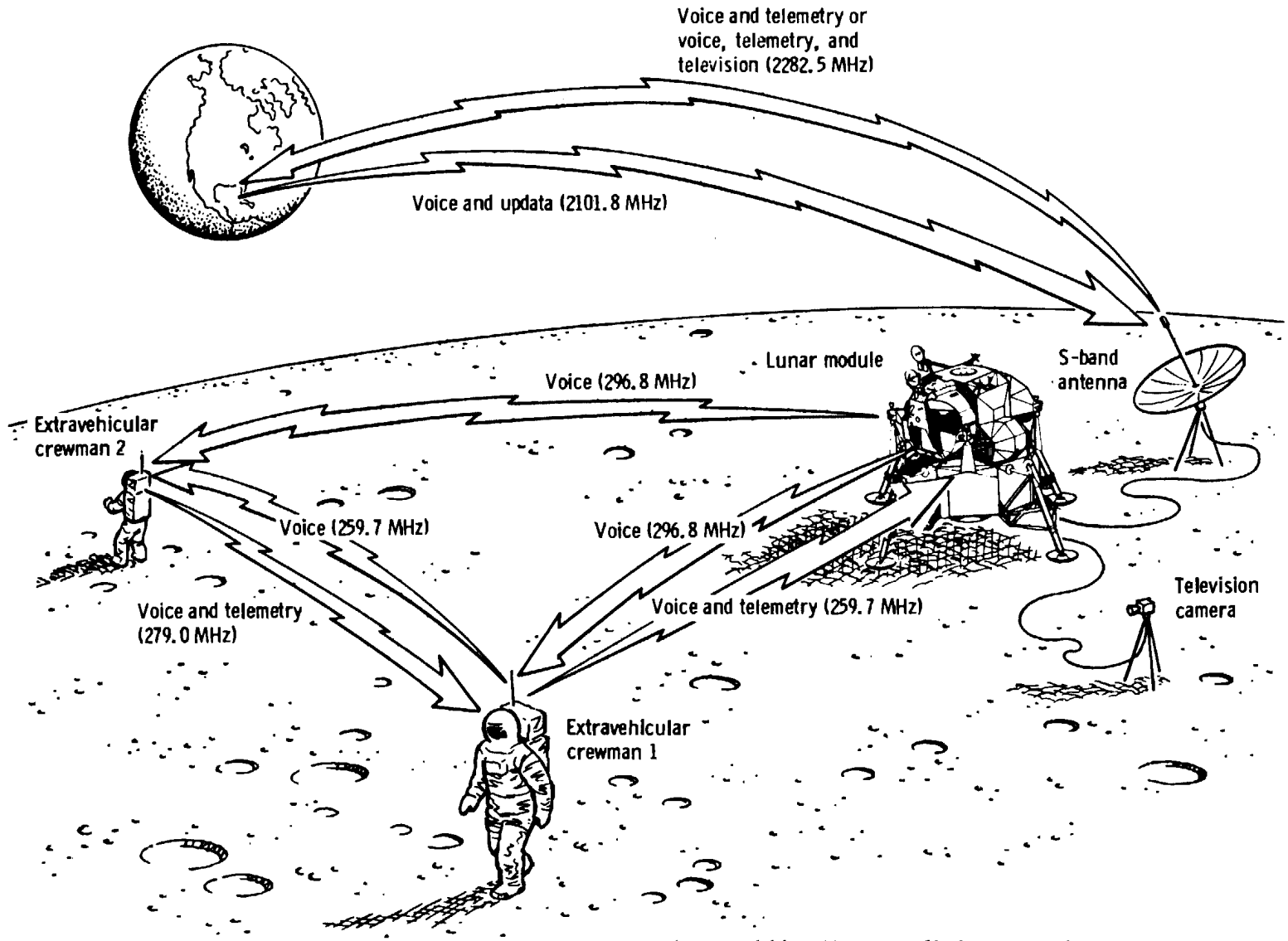

Figure 4-24. - Communications capabilities during extravehicular activities of the Apollo 11, 12, and 14 missions.

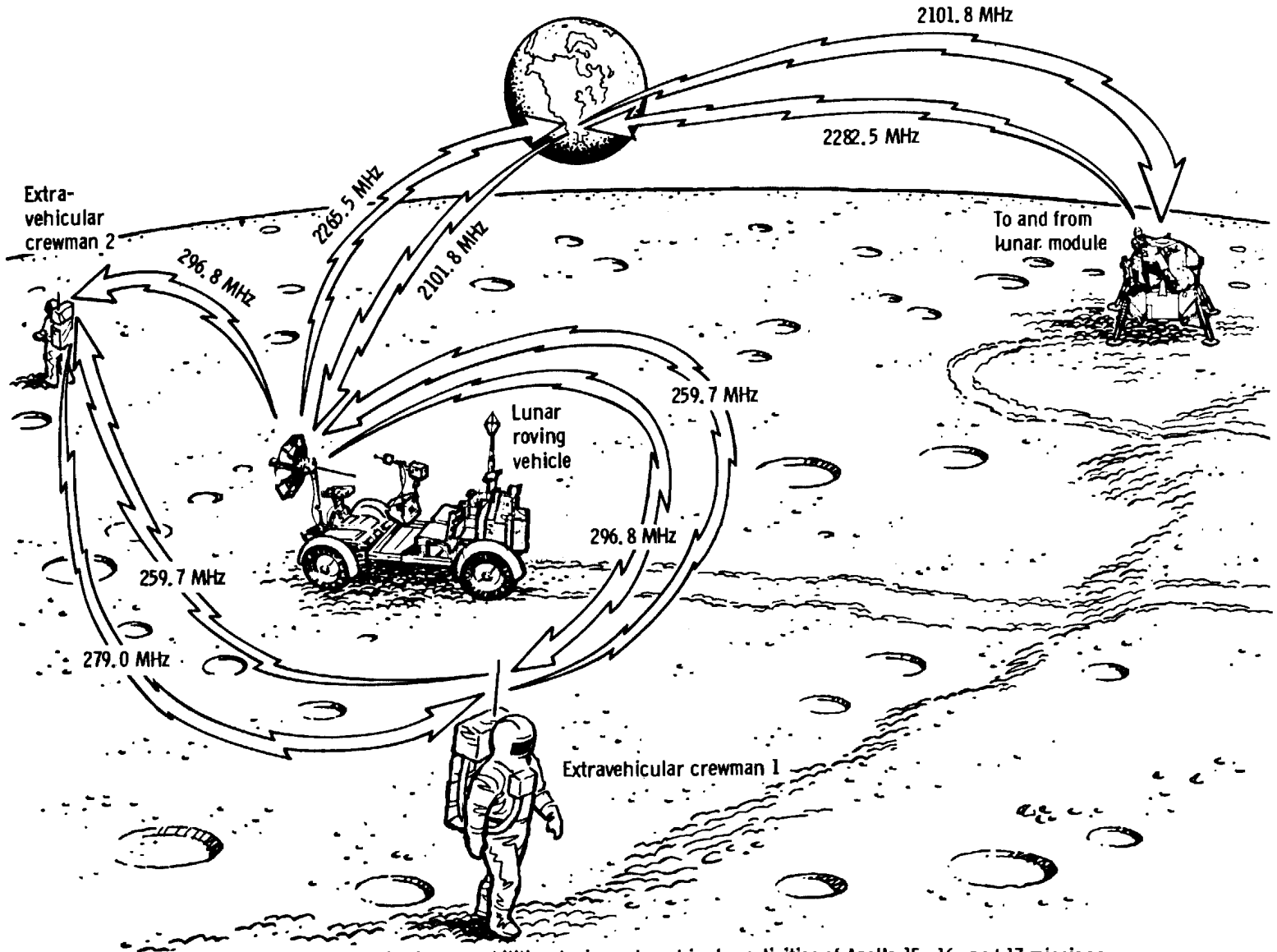

Figure 4-25. - Communications capabilities during extravehicular activities of Apollo 15, 16, and 17 missions.

The system development problems were primarily associated with the requirements for minimum weight and power consumption, high reliability, independent operation, ease of system installation, and control by a pressure-suited crewman. Independent operation meant that the system had to supply its own power and maintain its proper thermal environment. In the event of lunar roving vehicle failure, the system also had to operate while being hand-carried by a crewman.

The reliability of the lunar communications relay unit system was evidenced by the fact that no failures occurred during the prelaunch testing nor during the lunar missions. The system was used for approximately 6 hours on each of the three extravehicular activities of each mission. The quality of the transmitted voice and data was excellent. The received television quality was dependent on the available tracking coverage of the earth stations. Stations with 85-foot-diameter antennas were located geographically to provide 24-hour reception, and the signal strength received by these stations resulted in a relatively good television picture, although some noise was evident. Reception with 210-foot-antenna stations, when available, increased the signal level and provided excellent picture quality.

4.9.4 Television Camera Systems

Experience during the early Apollo missions showed that an inordinate amount of crew time was being spent in adjusting and pointing the television camera, and that useful coverage was available only within a small area on the lunar surface for each setting of the camera. (Coverage was limited by the 100-foot length of the cable which connected the camera to the lunar module.) With the planned addition of the lunar roving vehicle on the Apollo 15 mission, the capability for remote control of the television camera from the Mission Control Center was incorporated and changes were made in the camera which would also provide the capability for optimum public affairs and scientific operations coverage.

The overall ground commanded television assembly consisted of a color television camera and a television control unit. The television camera with its positioning assembly, was connected to the lunar communications relay unit by a cable which carried ground commands to the television control unit and returned the television pictures to the lunar communications relay unit for transmission to earth. The television camera used a silicon intensifier target tube and a field sequential color wheel. Use of the silicon intensifier target tube provided freedom from burn, even if the camera was pointed directly at the sun. Also, the camera's automatic light control permitted operation over an extremely wide range of scene brightness levels. The camera weighed approximately 13 pounds, required 11.5 watts of power, and was 4 inches high, 6.5 inches wide, and 16.5 inches long (including a 6 to 1 zoom lens). Camera azimith, elevation, power, automatic light control, lens zoom, and lens iris position were capable of being remotely controlled by ground command with manual override provisions for crew operation.

Experience with the ground controlled television assembly on the Apollo 15 mission revealed a much greater problem with flying dust from the lunar roving vehicle than had been anticipated. Crispness of the television picture was badly degraded, particularly when sunlight impinged directly on the dusty camera lens. For the Apollo 16 and 17 missions, the crews were furnished with a brush that was used to clean the lens at the beginning of each science station stop. In addition, a lens hood was attached to the front of the camera to reduce the effect of the sunlight on the lens. Resolution and clarity of the picture were sufficient to assist the geologists in guiding the crewmen and, in some cases, picture detail was good enough to allow flight controllers to assist the crews during the extravehicular activities.

On the Apollo 15 mission, the elevation mechanism of the ground controlled television assembly failed because of high temperatures. The failure occurred in a plastic clutch-facing disc. The entire clutch assembly was redesigned prior to the Apollo 16 mission using a metal-to-metal clutch.

On the Apollo 17 mission, the camera tripod and cabling which had been used to connect the ground controlled television assembly camera to the lunar module to save weight were omitted and television signals were sent to earth only through the lunar communications relay unit while the camera was mounted on the lunar roving vehicle.

Additional information on the Apollo television system is contained in reference 4-81.

4.10 FLIGHT CREW SYSTEMS AND EQUIPMENT

Two major hardware areas — the extravehicular mobility unit and the crew station configuration and equipment — are described in this section. Similar to the Mercury and Gemini space suits, the Apollo extravehicular mobility unit was an anthropomorphic miniature spacecraft capable of providing the crewman with life support and mobility. The unit served as a life-sustaining pressure vessel during lunar exploratons and transearth extravehicular activities and as a backup to the command module pressure system. The crew station configuration and the crew equipment for both the command module and the lunar module changed constantly throughout the Apollo program because of expanded mission objectives, flight experience, correction of design deficiencies, new interface requirements, and crew recommendations. These changes as they relate to program development are discussed.

4.10.1 Extravehicular Mobility Unit

The extravehicular mobility unit (fig. 4-26) was comprised of two main subsystems: (1) the pressure garment assembly and its accessories and (2) the portable life support system. Emergency oxygen and water-cooling systems were provided in case of portable life support system failure. The subsystems and some of the accessories of the extravehicular mobility unit are shown in figure 4-27.

4.10.1.1 Pressure garment assembly.- The pressure garment assembly was a man-shaped pressure vessel which enclosed and isolated the crewman from the space environment. In addition to providing protection against the vacuum and temperature extremes of space, the extravehicular suit permitted the crewman to move about freely on the lunar surface and perform useful work. Such mobility requirements as crawling through the small hatch of the lunar module, climbing the lunar module ladder, walking over rough terrain, and driving the lunar roving vehicle were met.

The pressure garment assembly designed to satisfy these requirements was a multilayered, custom-fitted, flexible garment (fig. 4-28). Progressing from the crewman's skin outward, his lunar attire consisted of:

a. A liquid-cooled garment (a separate underwear garment containing small tubing through which cool water was circulated to transfer metabolic heat from the body)

b. A comfort liner of lightweight nylon fabric

c. A gas-tight layer of Neoprene-coated nylon acting as a bladder

The bladder layer included convoluted joints at the ankles, knees, thighs, waist, shoulders, elbows, and neck. These bellows-type joint sections were molded of a special latex and natural rubber compound that gave the suit its bending capability. Gas-containing elements had a nylon fabric restraint layer that prevented the suit from ballooning excessively and caused the suit to assume the anthropomorphic shape. The entire suit was ventilated with oxygen for body cooling, carbon dioxide removal, and maintaining the helmet visor in a fog-free condition.

The pressure garment assembly was covered with a series of conformal material layers to reduce the heat flow into and out of the suit. The cover also acted as a micrometeoroid protection layer and was referred to as an "integrated thermal micrometeoroid garment." The cover consisted of seven separate layers of aluminized plastic film separated by very thin Dacron material. In space, a vacuum between the layers eliminated heat transfer by convection. since the layers did not effectively contact each other, heat flow by conduction was very small. Heat flow by radiation was reduced by the reflective aluminum surfaces.

The crewman wore an almost unbreakable plastic helmet that had the appearance of a fish bowl. Special visors covered the helmet to reduce the amount of light and heat that reached the head. The crewman's gloves were custom molded to provide the best finger tactility.

Figure 4-26.- Lunar surface extravehicular mobility unit supporting astronaut activity.

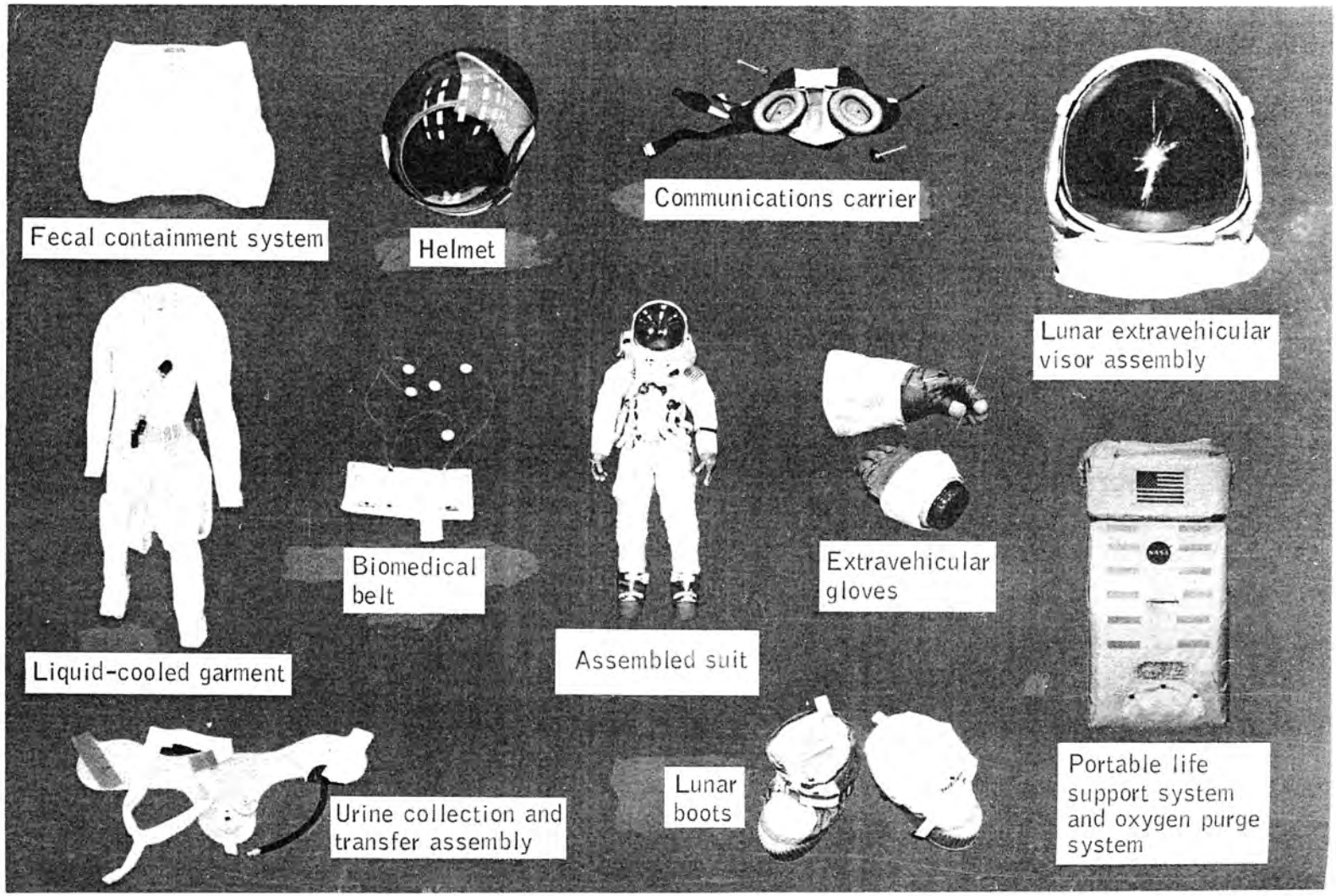

Figure 4-27.- Major subsystems of the extravehicular mobility unit.

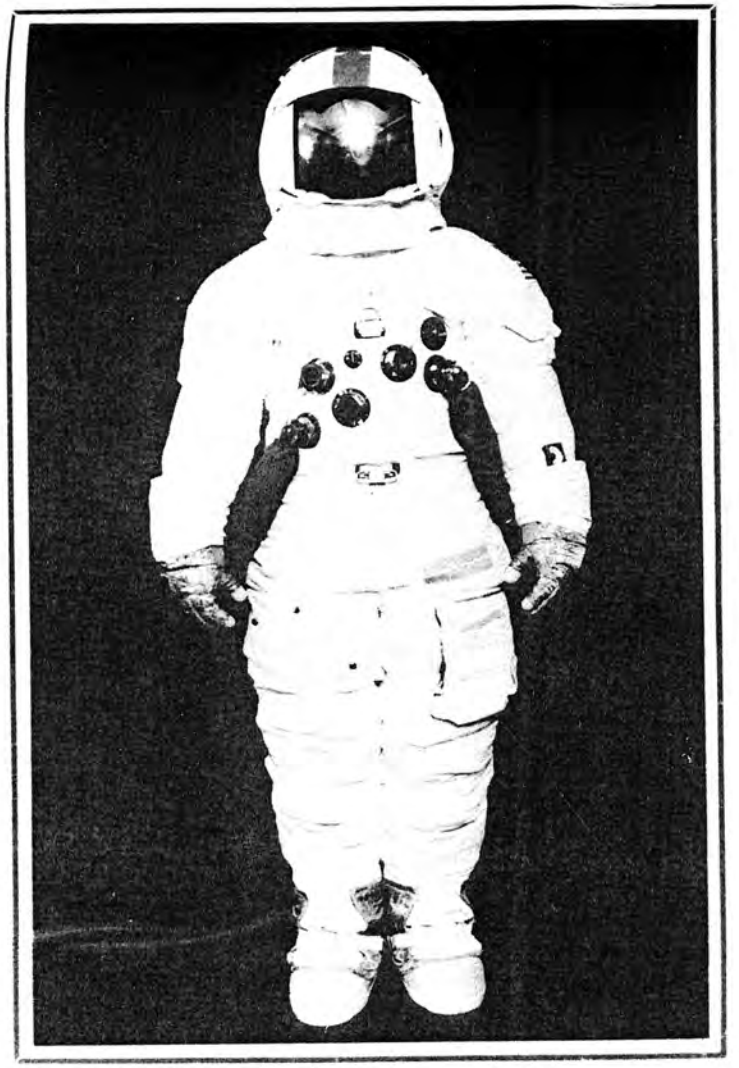

(a) Outer protective garment and accessories

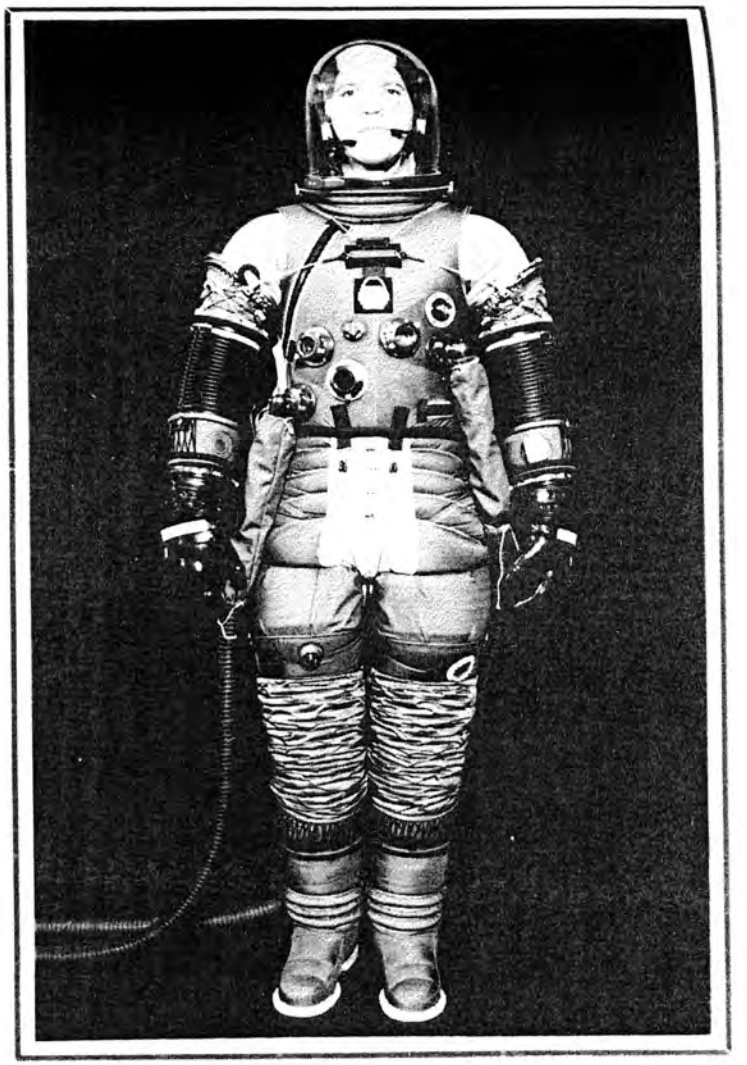

(b) Pressure garment assembly

Figure 4-28.- Lunar surface extravehicular suit.

Other items used in conjunction with the pressure suit, depending on the specific situation, consisted of:

a. Constant wear garment

b. Fecal containment system

c. Communications carrier

d. Bioinstrumentation

e. Urine collection and transfer assembly

f. Lunar extravehicular visor assembly

g. Lunar boots

h. Purge valve

Several of these items are included in figure 4-27.

The suit and its related equipment were tested in rigid test programs to demonstrate their performance. Basic development testing was conducted to determine the ultimate capability of the equipment. Interface testing was conducted to verify the limits of the compatibility of each item with the mating equipment. Environmental testing demonstrated system performance during and after exposure to all the environmental conditions in which the suit was designed to operate. Another form of testing, cycle qualification, was undertaken to establish the wearability or useful life.

Several significant problems were revealed that required changes to the initial suit configuration as a result of the testing and actual flight experience. In cycle testing, a particular movement used for picking up rocks from the lunar surface loaded a restraint line of the suit to a much higher level than anticipated. The entire line of restraint was redesigned to take the induced loads. This redesign required new cable swages, stitching techniques, and cord terminations. Field testing of training suits revealed deterioration of one of the rubberized components. The cause of the degradation was determined to be an insufficient quantity of an ingredient that retards aging and oxidation. a change was made in the formulation of the material and, as a result, much of the qualification testing had to be repeated.

With the introduction of the lunar roving vehicle, a new requirement was imposed on the pressure garment assembly: the crewmen had to sit in a normal driving position. A waist joint was designed into the suit to meet this need. Another change was that the vertical entrance zipper on the back of the suit had to be relocated. A different type of zipper was used because the original configuration could not seal reliably in the new application. As testing progressed, the need to improve some of the zipper manufacturing equipment was identified and X-ray inspection of each zipper was performed. Each zipper had approximately 700 teeth, each of which had to meet eight different dimensional criteria. The detailed inspection, although very tedious, eliminated the possibility of using potentially defective units.

4.10.1.2 Portable life support system.- The portable life support system (fig. 4-29) was a self-contained unit that controlled the environment within the space suit during extravehicular activities on the lunar surface. The unit was worn as a backpack (fig. 4-26) and was connected to the suit by umbilicals. System development was based on previous spacecraft (Mercury and Gemini) environmental control system technology, but the Apollo unit was the first truly portable, self-contained life support system to be used in the space program.

Five subsystems made up the portable life support system: a primary oxygen subsystem, an oxygen ventilating circuit, a water transport loop, a feedwater loop, and a communications system. The primary oxygen subsystem supplied oxygen for breathing and pressurization of the pressure garment assembly. The oxygen ventilating circuit cooled oxygen through the pressure garment assembly and the portable life support system. In doing so, the circuit removed carbon dioxide and contaminants by interaction with lithium hydroxide and activated charcoal and removed excess water entering the oxygen flow (mainly from the crewman's respiration and perspiration) by use

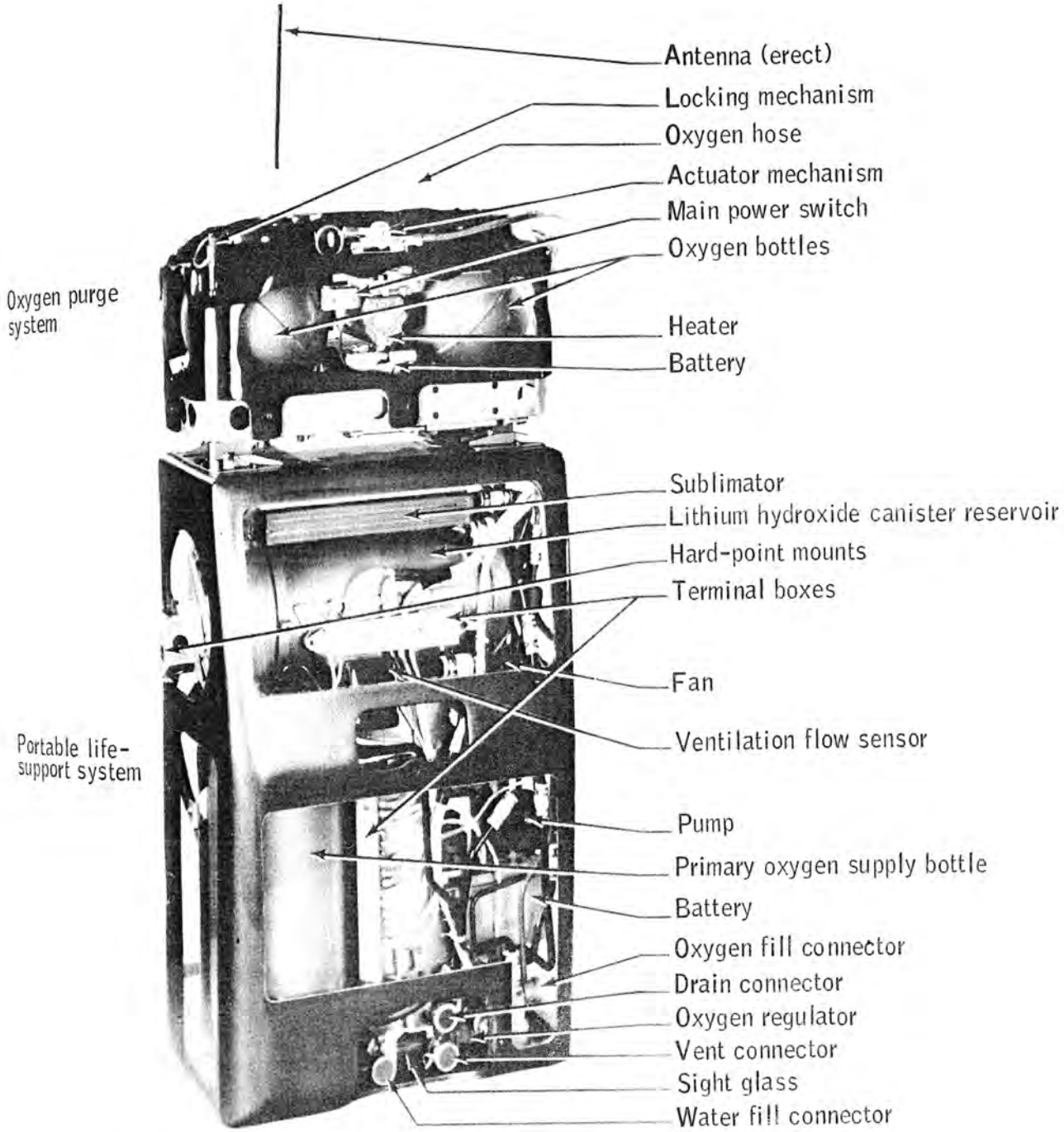

Figure 4-29.- Portable life support system and oxygen purge system.

of a water separator. The water transport loop circulated cool water through the liquid-cooled garment to cool the crewman by removing metabolic heat and any heat leaking into the suit from the external environment. The feedwater loop supplied expendable water, stored in a rubber-bladder reservoirs, to a heat-rejecting porous plate sublimator, a self-regulating heat exchanger. The communications system provided primary and backup dual voice transmission and reception, telemetry transmission of physiological and portable life support system performance data, and an audible warning signal.

A remote control unit, attached to the suit chest area, contained the portable life support system water pump and fan switches, a four-position communications mode selector switch, dual radio volume controls, a push-to-talk switch, an oxygen quantity gage, five warning indicators, the mounting for an oxygen purge system actuator, and brackets for mounting cameras. Each portable life support system could be recharged from expendables carried on board the lunar module. The expendables were oxygen, water, batteries, and lithium hydroxide cartridges. When fully charged, the portable life support system, control unit, and oxygen purge system weighed 135 earth pounds.

The portable life support system was originally designed for 4 hours of use at a metabolic rate of 930 Btu/hr. The system designed to meet those requirements used only gas ventilation for cooling. Extravehicular activity experience from the Gemini program showed that the metabolic rates were higher than expected and that gas cooling was inadequate. The portable life support system was redesigned to provide liquid cooling through a liquid-cooled garment (fig. 4-27) to handle the higher metabolic rates.

The liquid-cooling design was used during all Apollo extravehicular activities and proved to be extremely successful. The portable life support system was flight tested on the Apollo 9 mission and, for the first time, a man's life was sustained by a completely portable environmental control system. Based on the success of the Apollo 9 mission, the decision was made to perform extravehicular activities outside the spacecraft with two crewmen on the lunar surface. Originally, one crewman was to remain in the spacecraft while the other collected lunar samples. The change in requirements necessitated replacing the communications system in the portable life support system with a unit that would allow the transmission of voice and telemetry data from both crewmen simultaneously. The Apollo 9 portable life support system configuration did not have this capability. The addition of the extravehicular communications system was the only major change between the portable life support system used on the Apollo 9 mission and that used on the Apollo 11 mission.

The system, as used on the Apollo 11, 12, and 14 missions, was capable of providing life support for 4 hours and could be recharged from the lunar module to support two two-man extravehicular activity periods. The portable life support system was changed to accommodate three two-man extravehicular activity periods of 7 hours duration each for the Apollo 15, 16, and 17 missions. In addition to increasing the consumables capability, the portable life support system water diverter valve (temperature controller) was changed so that the crewmen would not be excessively cooled during low-activity periods.

4.10.1.3 Oxygen purge system.- Three emergency oxygen systems were developed during the Apollo program. The first and second configurations, called the emergency oxygen system, were extremely simple and performed identical functions. Both units provided for 5 minutes of emergency flow at a rate of 2 pounds per hour.

The mission requirements were reviewed and revised in mid-1967 to provide additional emergency oxygen and to permit extravehicular excursions to distances from the lunar module that were greater than previously planned. The oxygen purge system (fig. 4-29) designed for the new requirements, performed the same function as the emergency oxygen system; however, the oxygen purge system provided a minimum of 30 minutes of flow at a rate of 8 pounds per hour (for increased metabolic heat rejection) and permitted the extension of the safe extravehicular activity range. The rate of flow was determined by a purge valve located on the pressure garment assembly. A full-open valve position created an 8-pound-per-hour deliberate "leak" in the system; a second valve setting created a 4-pound-per-hour flow that could be used to conserve oxygen and to provide at least 1 hour of emergency "get back" capability when the buddy secondary life support system was used to provide the majority of heat removal.

The original oxygen purge system, as flown on the Apollo 9 mission, incorporated a heater to preheat the gas introduced to the regulator and to maintain the temperature of the gas delivered to the suit above 30° F. Subsequent testing indicated that flow, pressure regulation, and thermal comfort could be maintained without the oxygen purge system heater. Therefore, the heater was deleted for Apollo 11 and subsequent missions. The only other oxygen purge system change was the addition of hardware required for "helmet mounting" the system for transearth extravehicular activities.

4.10.1.4 Buddy secondary life support system.- The buddy secondary life support system (fig. 4-30) was designed as an emergency system to permit a crewman whose portable life support system was not cooling properly to share the cooling system of his companion's portable life support system. The addition of the buddy secondary life support system allowed the crewmen to travel farther from the lunar module during extravehicular activities than they otherwise could have. The system was made up of two hoses protected by a single thermal insulation cover. A connector divided the cooling water of one portable life support system between both crewmen. If the oxygen purge system had been required for use, the buddy secondary life support system would at least have doubled the time allowed for return to the lunar module because the oxygen purge system would not have been needed for cooling and could have supplied oxygen at a slower rate.

4.10.1.5 Transearth extravehicular system.- The requirements for the extravehicular mobility unit were different for non-lunar-surface extravehicular activity operations; consequently, changes were made to the unit for these operations.

The transearth extravehicular system was designed and configured for operation in zero gravity in free space. The system included a command module suit, an extravehicular visor, gloves, a constant-wear garment, a urine collection and transfer assembly, bioinstrumentation, an oxygen purge system, and a purge valve. These items were used during the Apollo 15, 16, and 17 missions when film magazines were retrieved from the scientific instrument module bay. Special requirements for the system included modifying the command module and suit oxygen and electrical subsystems.

The command module modifications included the following provision.

a. A gaseous oxygen supply through an umbilical

b. An electrical cable that transferred communications and special warnings (low ventilation oxygen flow and low suit pressure)

c. A braided interlocking tether designed into the umbilical as a restraining device and attached to the vehicle and to the crewman for safety

The suit modifications included the following.

a. Addition of a pressure control valve that regulated the suit pressure in conjunction with the umbilical oxygen supply

b. Remounting of the secondary oxygen system (one of the oxygen purge systems retained from lunar surface operation)

During development of the system, cooling from an open-loop oxygen system was determined to be sufficient because of the low metabolic rates required.

4.10.2 Crew Station Configuration and Equipment

The crew station included such items as displays, controls, supports, restraints, and stowage areas. The specific items considered as crew equipment were also extremely diverse. This equipment consisted of such items as flight garments, accessories, medical and bioinstrumentation components, survival equipment, and docking aids. Many of these items are discussed elsewhere in this report; therefore, the discussion here is limited to only general aspects.