[redacted] Info 70 6.0.1 Astp 194a

NOV 5 1970

MEMORANDUM TO: See attached list

FROM : FC/Glynn S. Lunney

SUBJECT : Trip Report - Delegation to Moscow to Discuss Possible Compatibility in Docking

Before I discuss our technical meetings, so many people have asked me about personal observations that I have included some of these at the beginning. In general, everything was done to make our visit pleasant and productive. General comments are as follows.

1. Our time was scheduled very well, and we kept a busy schedule.

2. Transportation and a guide/interpreter were always at the ready.

3. Weather was mostly overcast and occasional drizzle, but just "raincoat" cold.

4. We stayed in a very large, modern hotel (the Russiya - 4000 rooms) and the quarters were very adequate.

5. Breakfast was a buffet arrangement in the hotel.

6. Lunch in the middle of the afternoon and dinner in the late evening were scheduled each day at various places. The food was delicious, the Russian vodka is an excellent drink; the caviar is worth eating also.

7. There is a fair amount of apartment building going on in Moscow. From what we saw, there were essentially no single-family dwellings in the city; the 7 million population apparently lives in the apartment buildings. We were in only one apartment building which is provided specifically for the foreign embassy people. The rooms were comfortable and about the size of Houston apartments.

8. We did not see any downtown or remote shopping center areas. Mostly, there were shops of different merchandise in some of the first floors of buildings we passed.

9. There is a very extensive subway system we did not see, and there never was any real traffic problems although it slowed a little around quitting time. Their car, the Volga, is about the size of a 4-door Mustang--if you can imagine that.

10. The people generally seemed to me to be more serious or somber than you might find in our country (outside New York); but that is really hard to justify on very limited contact in a large city.

11. The Bolshoi Theater is a beautiful place.

For the talks, we met with the same Soviet delegation on all three days. These same men also accompanied us on most of our unofficial stops. General comments are as follows.

1. The official people we visited were friendly and openly discussed various aspects of their program. They presented and answered questions on their technical areas.

2. They were also very interested in bringing our first talks to a productive conclusion and to provide the framework for future discussions.

In attempting to summarize the technical discussions, I will include the impressions from our visit to Star City where their cosmonauts live and train. We visited there on Sunday and were greeted by the Commandant, General K..... General Beregovoy, who was in the U.S. last year, and Colonel Shatalov, the rendezvous pilot on Soyoz 4 and 5 flights, were our principal escorts. Star City is 40 minutes out of central Moscow in pleasant woods country. There were 3 or 4 apartment buildings (about 8 stories) and another one being finished (probably a sign of continued progress in manned space). We visited their exhibit area, a memorial area for Yuri Gagarin, saw a Gagarin film and, the highlight for me, visited two

different simulators. The first was a general purpose simulator for all phases including docking. With reference to Figure 1, this simulator has the command module below and the orbital module attached above (with a hatch to pass through).

In the order I visited them, the orbital module was a sphere about 7-8 feet in diameter. A sketch of it is shown in Figure 2, and the inflight films and stills would indicate the flight vehicle being very similar to these simulators. The walls were covered with a light-colored, felt-like material much like the ceiling covering in some of our earlier cars. The flight atmosphere is an air mixture, slightly greater than one atmosphere, I believe. In the sketch, you can see the central trench area with the hatch in the floor. From this view, the left compartment has a hinged lid for stowage. (I imagine their space suits are stowed in there.) The right compartment is a work area, with a top like a desk and a slightly-inclined-from-the-vertical control panel. I believe there is some access to the volume underneath from the side of the central trench. There was also a manual handle in this area for water condensation removal. (Sounded like a manually operated squeezer, but I could not tell if that was their primary mode--I doubt it.) There were 4 portholes (approximately 10" diameter) 90° apart and an ECS inlet and CO_2 scrubber against the wall on the opposite side of the central trench from the EVA hatch. The side (?) view in Figure 2 attempts to show that. Based on the answers given, they do not use replaceable cartridges but add other inlets and scrubber units, dependent on the flight. I am still a little surprized by that, but maybe we lost something in the translation.

The overall impression of this module is one of simplicity, and I will try to convey that by a discussion of what I will call the control area

on the right-hand compartment. This is shown in Figure 2 from memory, and we did not hear what all the buttons were for. From the front, the central panel has a stowage compartment on the left side with a food warmer mounted on the wall behind it. The control panel has buttons, a C&W panel (about 6x6 lights), a speaker for A/G voice and one of the very few gauges in the ship. The gauge has three readouts--command module pressure, orbital module pressure, and ECS pressure (source or regulated--I am not sure). An identical gauge exists in the command module.

The hatch can be operated remotely from the control panel by several buttons--for depress, open and close hatch (although I did not hear this, these functions are probably repeated in the command module). The depress and hatch actuation can also be done with manual valves, handles on the hatch itself. The hatch opened into the cabin. Several other buttons on the control panel were labeled for use with the TV camera mounted on the far right of the control panel and with a long length of power cord stowed in the compartment underneath. On the tabletop in front of the control panels were several switches and a small electrical package, apparently for experiments.

From their flight films, the orbital module is the living, sleeping, and experiment area where the crew spends most of their time. It, of course, is also an airlock. I think it is worth repeating how it impressed us--a roomy area with very simple controls and instruments, probably all of which were devoted to airlock, experiment, living and sleeping functions (as opposed to attitude control, etc).

Next, George Hardy and I went down to the command module with Colonel Shatalov. For three men this is a small volume, but is only used during takeoff, landing, rendezvous, and periodically in orbit (see Figure 3); and, since they wear flight coveralls for these portions, it is adequate. Also, the couches are essentially against the floor for most flight phases. Dr. Gilruth found out that the couches are raised toward the control panel for attenuation travel at some point in the deorbit-landing phase.

Again, the very strong impression is one of simplicity--no circuit breaker panels, no large number of switches, not many displays. The couches are not exactly parallel to the display panel. As a matter of fact, we almost sat on the horizontal couches to view the panel with the upper hatch to the orbital module overhead. In Figure 3, I have sketched the control/display panel as I remember it. From the left top, the G&N area had a 6-8" diameter globe of the earth which obviously rotated with the orbital position. There were several digital readouts in this area like latitude, longitude, altitude, period, and maybe one or two others. I could not determine exactly how these readouts were driven. From the rest of what I learned, I would guess they were set up manually (probably from ground instructions) and then are driven in some approximate way to provide the pilots with general navigation data. There was a round-face clock with, I believe,a couple of controls below that. There was a C&W panel (maybe about 6x8) with red, yellow, and blue lights from the top down which is also used in some fashion in periodic systems checkout. The TV screen showing the target vehicles was approximately 5-6" square and driven from either of two TV cameras up in the nose of the ship, around the probe or drogue mechanisms. Below this screen was a range/range rate meter. On

the upper right were 6 digital readouts with controls for setting them. I had the impression these were digital inputs to the control system for attitude and/or translation maneuvers, but I may not have that quite right. I believe there was something in the lower right which I cannot recall--perhaps radio controls. Below the panel and above the center couch right knee was the periscope view of the target. (We were concentrating on the rendezvous and docking aspects, but I gathered that they use it for earth observation also.) The identical pressure gauge was on top of the panel, and there was a "sun lamp" above that. George Hardy was questioning about that and I did not hear the conversation. My guess is that it was a device for the pilot to see how close the vehicle alignment was for solar inertial holds for their solar panels. As in ours, the left-hand T-handle was for translation, although some switches had to be used for fore-aft braking. The right hand T-handle device was for rotation.

On the right and left of the main display panel was the control device which I figured to be the heart of the ship control. There were about 12 buttons down the left side of the device which seemed to be used for operating a given phase. As a phase was selected; e.g., manual docking, the pilot would punch one of these buttons. Then, next to the buttons, a set of display windows with labels on them would be mechanically rotated into view. Some of these windows would be lit, some blue, and some not lit. Although it was difficult to get a clear understanding, this device seemed to be used for whatever configuring would be necessary (perhaps deadbands, for example) and for displaying and executing any sequential functions. These could be automatic or backed up manually. There were two columns of

buttons to the right of these windows which seem to be this manual function. I asked if a different phase; e.g., landing, would be selected on this panel and got an affirmative. I kind of concluded that this device, then, was used to select the flight phase--some automatic configuring is probably done according to the phase; and there can be auto or manual sequential functions performed. So, it seemed to be a combination of a sequence controller and a vehicle configurer according to the flight phase. (Admittedly, this is some extrapolation on my part.) The flight films we saw showed the pilots using this device in their periodic systems checkout. So I would also guess that the light patters there and on the C&W panel represented a checkout, monitoring tool. Also, one row of buttons across horizontally were red, indicating special precaution.

All in all, this was a fairly simple cockpit and we watched a docking exercise from about several hundred feet out into docking. Much as you would expect, the pilot monitored the TV, the periscope, and the range/range rate meter and brought the ship in to docking. Roll is easy with the displays, and at docking the periscope cross hairs were lined up on a flashing light on one of the other ships' booms. Again, no circuit breaker panels, few displays, and control switches, no attitude reference display (except periscope and perhaps sun lamp).

The second set of simulators were two command module elements--one active and one passive. There were 2 parallel tracks per module on which a model of the Soyoz spacecraft was brought towards the simulator, from about 150' away. One track was watched by the TV, the other through the periscope. The images were magnified to proper scale on the cockpit instruments. Inside the cockpit, all was very similar to the general

simulator and I concluded that this was a more accurate docking trainer, with a greater separation distance simulated than the general-purpose simulator. Roll control only needs to be within 15° but the cosmonauts always try for and generally make approximately 1 degree.

This simulator work was a great help in the following days of discussion. It was easy to watch and understand what was happening, but, in real specifics, it was more difficult to understand that sequencer, for example, with the time we had and the need to translate everything.

For our technical discussions with the Soviet delegation, two days were planned for a mutual exchange of experience and to outline a framework for future activities. On the third day, Wednesday, October 28, it was planned to formalize our discussions by approving a document containing the framework and schedule for future work. The members of two delegations were:

Dr. Robert Gilruth	B. N. Petrov (Academician - National Academy of Science)
Arnold W. Frutkin	K. P. Feoktistov (Deputy Director - Manned Space Program)
George K. Hardy	V. S. Syromyatnikov (Docking Assembly)
Caldwell C. Johnson	V. V. Suslennikov (Radio Guidance Equipment)
Glynn S. Lunney	V. A. Lavrov (Foreign Affairs)

On the first day, the U.S. side presented two discussions:

1. Rendezvous experience and techniques. (General vehicle capabilities, rendezvous techniques.)

2. Docking assemblies. (Gemini, Apollo designs, future possibilities)

The Soviet side presented two discussions, essentially parallel to our presentations, but with no reference to any future programs. Dr. Feoktistov presented the rendezvous discussion; Dr. Syromyatnikov presented the docking hardware discussion. Papers were given to us on each of these subjects and on the radio guidance system presentation on the next day. We are in the translation process now, and these papers will be available.

With reference to rendezvous, the Soviet approach is to build a system for both unmanned and manned use. They view the rendezvous process in three distinct phases.

1. Delivery of the active vehicle to the vicinity of the target. (Done in either direct ascent fashion, or a re-rendezvous vectored from the ground.)

2. The zone of automatic rendezvous to station keeping (The limits of this zone were not specifically identified, but the range was on the order of tens of kilometers and tens of meters per second.)

3. Station keeping from about 300 meters to docking (Relative velocity is very low during this phase.)

The system discussion primarily centered around phases 2 and 3, and I understood the second phase discussion best. Phase 3 is easy manually, but I did not fully understand the implementation for the automatic option. The automatic rendezvous is started when the two vehicles acquire each other and orient nose-to-nose. This is done with 2 acquisition-type antennas, giving spherical coverage. The radio guidance radar heads are then locked to each other. The active ship has a gimballing head and

the passive ship has a fixed head with vehicle orientation to keep the nose pointed at the active ship. Range, range rate and the relative angular motion is measured by the active ship. The relative angular motion is then used to continually establish the plane in which the guidance system solves the problem. The mechanization of the guidance scheme is to establish and maintain a range/range rate corridor and to keep the relative angular motion within some deadband. This is done by firing the main engine (of which there are two [?] of about 800# thrust) in the direction required to satisfy the range corridor or the line of site motion deadband. This is an iterative, driving technique to bring the vehicles within a few hundred meters.

Once in this zone of docking, small thrusters of 20# are used and relative roll control is established for docking assembly. This can be done either automatically or manually, and, I believe, signal strengths to mutually aligned antennas are used in the auto mode although I am not real positive of that. The manual mode we watched in the simulators was a very reasonable one and the bright flashing lights can be used on the lit side of the earth.

Dr. Syromyatnikov presented a discussion of the docking assembly -- a probe and drogue device very similar to ours, with a few exceptions.

1. It was not designed to be removed for a tunnel transfer. (They use an EVA transfer)

2. They use an electric motor for retracting which permits unlimited reuse.

3. The docking interface automatically includes the mating of four electrical umbilicals with on the order of 20-30 pins apiece.

Once the head of the probe is engaged, there are mechanical guide pins (6" long, 1" diameter, approximately) for further alignment and then grooves to get down to a 1 minute accuracy. This must be required for

only the electrical umbilicals and I get a little fuzzy here. I believe that the umbilicals alone are controlled to 1-minute and the rest of the mechanism is a 1-degree fit, but I pass to Dr. Johnson who understood this portion very well. Their alignment and velocity tolerances seemed to be about the same as Apollo.

On the second day of discussions George Hardy presented a discussion of the Skylab program, and I think the long term aspects of this flight intrigued the Soviets, especially after the Soyoz 9 18-day flight. After this discussion, Dr. Suslennikov presented a more detailed paper on the radio guidance equipment used in the automatic rendezvous. This paper did not add much to my understanding of the rendezvous but did discuss some of the functional elements within the radio guidance equipment--modulators, doppler shift extraction, etc. After this discussion, the Soviets requested similar kind of information on our system which we agreed to do. The kind of information is in the Russian text and is available in many of our block diagrams.

After these exchange discussions, we entertained the subject of what areas to study for compatibility and how to proceed. We had previously discussed the subjects which would require attention and the Soviet delegation had essentially the same ones. We grouped these subjects into logical groups such that three working groups could handle the range of subject matter. There would be some overlap between groups, and the three groups suggested are:

1. Group to assure compatibility of <u>overall</u> methods and means for rendezvous, docking, and life support.

2. Group to assure compatibility of radio, optical guidance systems and communications.

3. Group to assure compatibility of docking assembly and tunnel.

The groups, a more detailed definition of the work required, and the proposed schedule is contained in a summary of results signed by both delegations. This summary is being presented to Dr. Low of NASA and Academician Keldysh of the National Academy of Sciences. Once agreed to by these two parties, I envision the work proceeding along the lines expressed therein. It is my belief that this effort will involve a rigorous, full-time effort by a relatively small number of personnel, but with the support of many other elements. This effort will be similar to early mission and techniques planning combined with ICD tradeoffs and definition and, finally, preliminary system design to assure compatibility.

Glynn S. Lunney

Enclosures 3:
Figures 1-3

Addressees:
See attached list

(1) Radio Transponder Antenna
(2) Search and Tracking Antenna (2 units)
(3) Beacon Antenna (2 units)
(4) Roll Angle Antenna
(5) T. V. Boxes (2 units)
(6) Light Indexes (4 units)
(7) Light Beacon
(8) Visual Target (Periscope)
(9) Rendezvous and Orientation Motors (14 units)
(10) Approach-Correction Motor
(11) Docking Unit (Passive Type)
(12) Orbital Module
(13) Reentry and Command Module
(14) Service Module

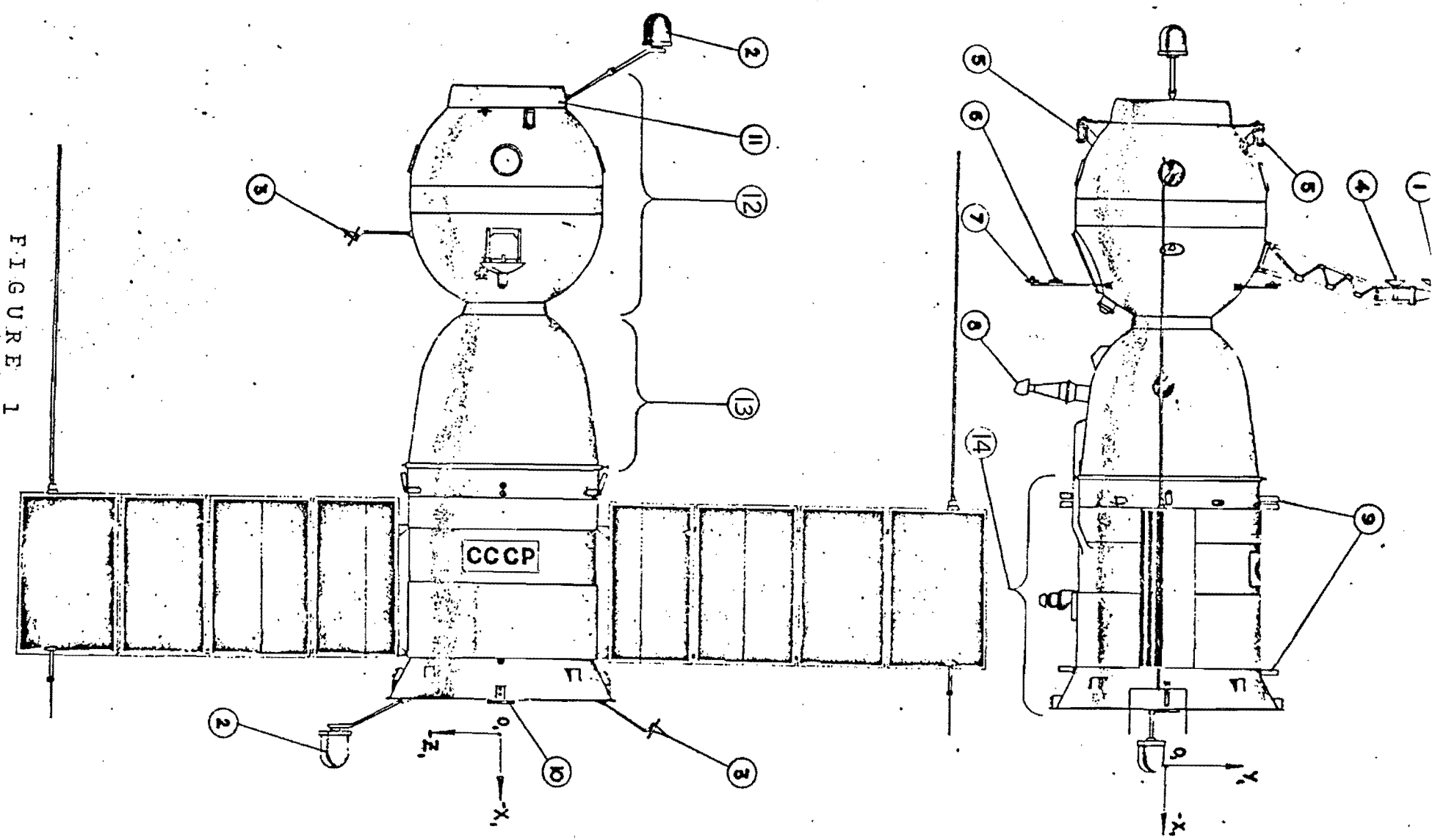

FIGURE 1

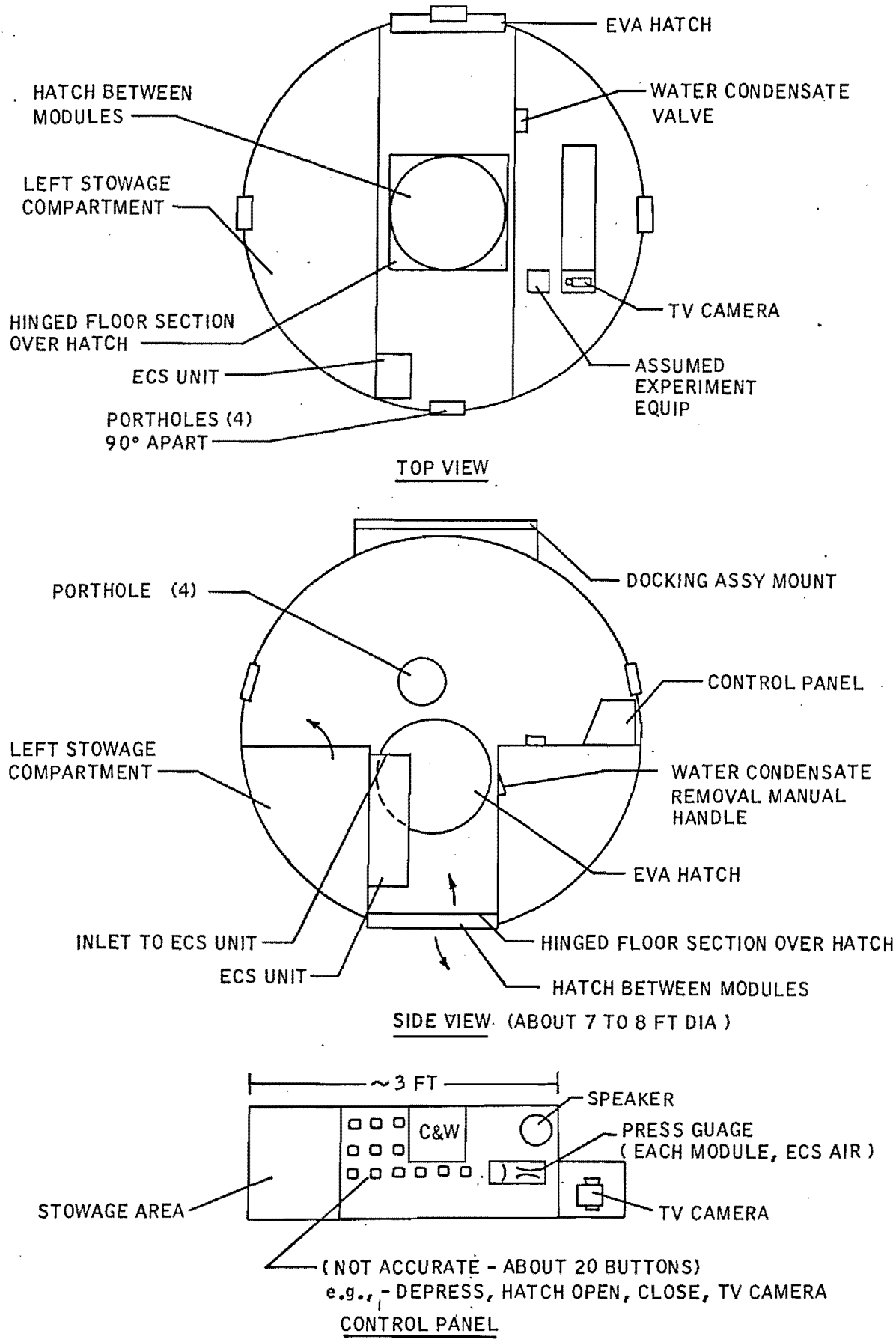

FIGURE 2- SKETCH OF ORBITAL MODULE

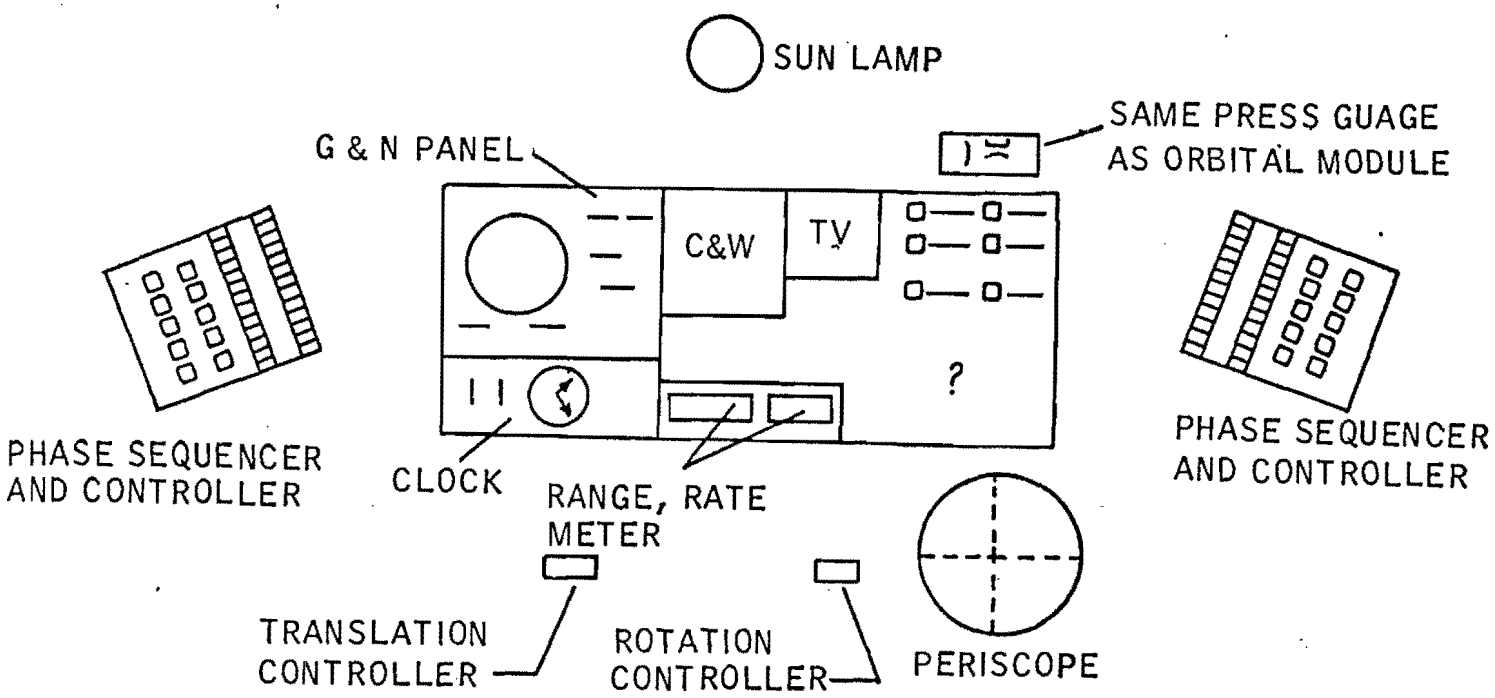

FIGURE 3- COMMAND MODULE DISPLAY PANEL
(ABOUT 3.5 X 1.5 FT.)