NASA TECHNICAL NOTE

NASA TN D-7476

NASA TN D-7476

APOLLO EXPERIENCE REPORT - TELEVISION SYSTEM

by Paul P. Coan

Lyndon B. Johnson Space Center
Houston, Texas 77058

NATIONAL AERONAUTICS AND SPACE ADMINISTRATION • WASHINGTON, D. C. • NOVEMBER 1973

1. Report No. NASA TN D-7476	2. Government Accession No.	3. Recipient's Catalog No.
4. Title and Subtitle APOLLO EXPERIENCE REPORT TELEVISION SYSTEM		5. Report Date November 1973 6. Performing Organization Code
7. Author(s) Paul P. Coan, JSC		8. Performing Organization Report No. JSC S-300
9. Performing Organization Name and Address Lyndon B. Johnson Space Center Houston, Texas 77058		10. Work Unit No. 914-50-17-08-72 11. Contract or Grant No.
12. Sponsoring Agency Name and Address National Aeronautics and Space Administration Washington, D. C. 20546		13. Type of Report and Period Covered Technical Note 14. Sponsoring Agency Code

15. Supplementary Notes

The JSC Director waived the use of the International System of Units (SI) for this Technical Note, because, in his judgment, the use of SI units would impair the usefulness of the report or result in excessive cost.

16. Abstract

This report relates the progress of the Apollo television systems from the early definition of requirements through the development and inflight use of color television hardware. Three television systems that have been used during the Apollo Program are discussed, beginning with a description of the specifications for each system. The document describes the technical approach taken for the development of each system and discusses the prototype and engineering hardware built to test the system itself and to perform the testing to verify compatibility with the spacecraft systems. Problems that occurred during the design and development phase are described. Finally, the flight hardware, operational characteristics, and performance during several Apollo missions are described, and specific recommendations for the remaining Apollo flights and future space missions are made.

17. Key Words (Suggested by Author(s))	18. Distribution Statement
*Television Cameras *Television Equipment *Video Communication *Image Velocity Sensors *Video Equipment	

19. Security Classif. (of this report)	20. Security Classif. (of this page)	21. No. of Pages	22. Price
None	None	30	Domestic, $3.00 Foreign, $5.50

*For sale by the National Technical Information Service, Springfield, Virginia 22151

CONTENTS

Section	Page
SUMMARY	1
INTRODUCTION	1
PROGRAM SUMMARY	4
Command Module TV Camera System	6
Lunar-Surface TV Camera System	8
Color TV Camera System	10
DESIGN/DEVELOPMENT TASKS	16
Secondary-Electron-Conduction Tube	16
Corona	18
Connector/Cable	19
Thermal Design	20
Synchronization	21
Viewfinder	22
Suited Operation	22
SPACE FLIGHTS AND PERFORMANCE	23
DEFICIENCIES IN DESIGN AND PROGRAM APPROACH	24
CONCLUDING REMARKS	25

FIGURES

Figure		Page
1	Apollo TV systems covered through the Apollo 13 mission	3
2	Command module TV camera (black and white)	7
3	Configuration of CM TV camera	8
4	Inflight TV monitoring and transmission system	9
5	Lunar-surface TV camera (black and white)	10
6	Configuration of lunar-surface TV camera	11
7	Composite video and synchronization format of lunar-surface TV camera	11
8	Block diagram of lunar-surface TV camera	12
9	Lenses used on lunar-surface TV camera	
	(a) Telephoto lens	12
	(b) Wide-angle lens	12
	(c) Lunar day lens	13
	(d) Lunar night lens	13
10	Apollo color TV camera	14
11	Block diagram of Apollo color TV camera	15
12	Inflight TV transmission system	15
13	Faceplate of image sensor	17
14	Cable configuration	19
15	Connector/cable joint	19

APOLLO EXPERIENCE REPORT

TELEVISION SYSTEM

By Paul P. Coan
Lyndon B. Johnson Space Center

SUMMARY

The initial considerations of spacecraft equipment required that the television be small, lightweight, and low in power consumption. These requirements and the desire to provide an acceptable television picture led to the design and development of a narrow-bandwidth system for the transmission of the video information from a spacecraft to earth. This system produced a slow-scan picture with acceptable resolution. Because this video information was to be made available to the public, appropriate ground-based video-processing equipment was developed to convert the Apollo signal to one that was compatible with the commercial television networks. As the goal of landing a man on the moon came closer, the television system was further required to operate on the lunar surface and to provide a capability of viewing low-light-intensity scenes with higher resolution. These requirements led to the development of a second generation of television cameras that used a dual-scanning mode of operation to achieve high resolution with one mode and acceptable motion rendition with the other. These same cameras used a specially developed image sensor that was sensitive to the very low light intensities that would be encountered during the lunar night. To operate during the temperature extremes on the lunar surface, a passive thermal control was also incorporated into the camera design. These cameras were built and tested and were operated on two Apollo missions, including the first manned lunar landing. As the Apollo Program progressed, higher gain antennas became available and more weight was allotted to the television equipment. These developments made possible the use of a television camera with standard commercial scanning rates, thereby eliminating the picture-smearing effect associated with the slow-scan motion rendition. A color wheel also was synchronized with this camera to provide a field-sequential color television system. At the same time, a ground-based signal processor was developed to convert the field-sequential color television signal to one compatible with the commercial networks. (These cameras have been operated during the Apollo 10, 11, 12, and 13 missions.)

INTRODUCTION

The requirement for real-time, near-commercial-quality television (TV) was established early in the Apollo Program, although, simultaneously, it was recognized that the low communications-power levels would cause a problem in transmitting

acceptable video transmissions from lunar distances. This problem was manifested by the lack of systems with information bandwidths adequate for television signals. After several narrow-bandwidth systems were investigated, a slow-scan analog system was adopted in conjunction with the unified S-band communications system.

Before the Apollo 10 mission, it was determined that a wider bandwidth was available for TV on the command module (CM) and that the 210-foot-diameter ground-station antennas could be made available to support Apollo missions. These factors allowed good signal strength at a wider bandwidth. Accordingly, a commercial-format TV signal could be transmitted from the CM. Additionally, the state of the art, particularly in video disk recorders, had advanced to the point that sequential color TV was practical, so color TV was phased into the CM beginning with the Apollo 10 mission. Although the available bandwidth on the lunar module (LM) was not as great as on the CM, it was determined that acceptable color pictures could also be transmitted from the LM. Accordingly, color TV was phased into the LM on the Apollo 12 mission.

The initial spacecraft TV equipment was procured by the CM prime contractor from a subcontractor; the equipment was designed to operate only in the Block I CM. Because this camera did not satisfy later Block II CM or lunar-surface requirements, another type of black-and-white television camera was obtained from a different subcontractor. This camera was a Government-furnished-equipment (GFE) item designed to operate in both the CM and LM as well as on the lunar surface. Because of stowage problems, the second-type camera was removed from the CM and a refurbished version of the first camera was placed on early Block II command modules. Later, in a weight-reduction program, the second-type camera was moved to the modularized equipment stowage assembly (MESA) on the LM and operationally constrained for use on the lunar surface only. See Figure 1 for vehicles supported by Apollo TV systems.

Significant technical advances were made in the course of developing the Apollo TV systems. These advances resulted from satisfying the requirements for minimum size, weight, and volume; the requirements for operation in intravehicular and extravehicular environments; the requirements for simplicity and ease of operation by suited astronauts; the requirements for performance parameters (both motion rendition and resolution) in a narrow bandwidth; the requirement for high reliability; and, finally, the requirement for ground conversion of nonstandard TV signals to formats compatible with commercial networks. These advances are enumerated in the following list of technical achievements.

1. First production of spacecraft TV camera to make significant use of microcircuits

2. First spacecraft TV camera to provide both motion rendition and resolution

3. First successful system to convert nonstandard 10-frame/second scan rate to standard commercial scanning rate

4. First color TV camera in space to provide motion rendition

5. First operational equipment to convert sequential color to commercial color (first reduction to practical state)

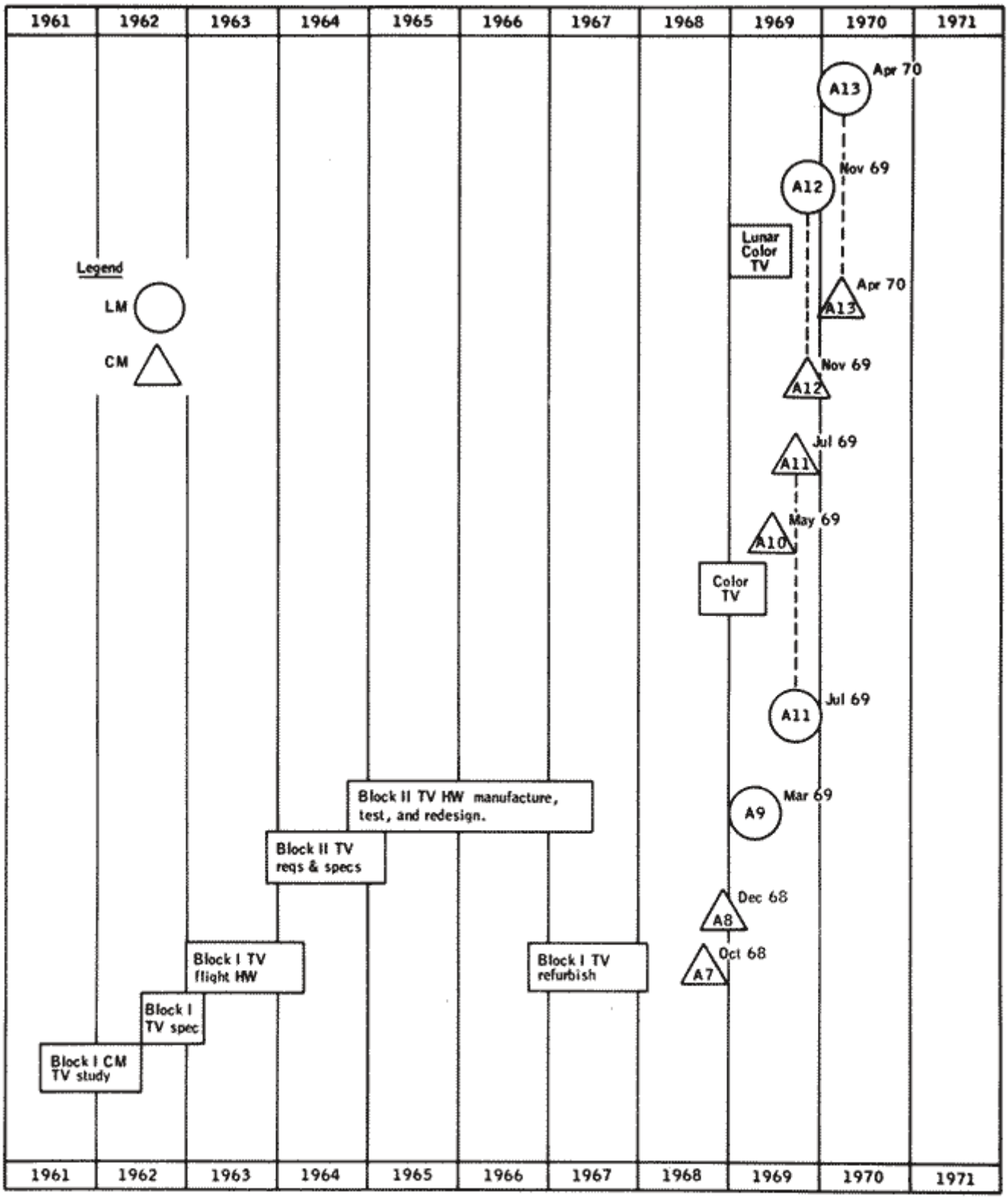

Figure 1. - Apollo TV systems covered through the Apollo 13 mission.

PROGRAM SUMMARY

Early in 1962, the contractor with primary responsibility for Apollo CM communications systems contracted with two subcontractors for parallel efforts to determine whether an analog or a digital TV system would best satisfy the Apollo requirements. Prime emphasis was placed on obtaining an acceptable picture within a narrow bandwidth. Both subcontractors were to design and fabricate a breadboard TV subsystem that could be used in a test program to define the parameters of a real-time TV system suitable for use on the Apollo spacecraft.

A slow-scan analog breadboard camera with variable frame rates and a simulated transmission system were built by one subcontractor. Exhaustive tests were conducted to evaluate scan rates, flicker phenomena, resolution, motion breakup, smear, scan-conversion systems, and bandwidth-compression systems.

The other subcontractor attempted to build a digital system relying on Roberts' modulation and reduced quantization rates to obtain a narrow-band system, but was unable to make the system work during the limited contract duration. Nevertheless, because this approach would have required an information bandwidth of approximately 20 megahertz, it was considered impractical for Apollo Program implementation. As a result of these efforts, the approach recommended for the Apollo spacecraft was an analog system using a 10-frame/second noninterlaced camera scan rate, 320 active lines/frame, and an aspect ratio of 4 to 3.

It was determined in a study made at the Lyndon B. Johnson Space Center (JSC), formerly the Manned Spacecraft Center (MSC), that an analog frequency-modulated channel of 500-kilohertz bandwidth, which could be provided using the existing S-band down link, should provide a picture with quality acceptable to the networks. This channel bandwidth was compatible with the camera parameters recommended as a result of the study programs by the prime communications contractor and the first subcontractor.

The decision to implement an analog, rather than a digital, system was based on the following results of the various study programs conducted for NASA.

1. For transmission systems having signal-to-noise ratios in excess of 20 to 25 decibels, the additional complexity of the onboard encoding equipment required by the digital system offset any advantage the digital system might have had over the analog approach in ability to transmit data precisely.

2. Good-quality digital TV required impracticably high information bandwidths.

3. Although several systems for bandwidth compression of digital TV signals were available — such as delta modulation, differential pulse code modulation (PCM), Roberts' modulation, unequal band PCM, and the various time-buffering techniques — none had been sufficiently perfected to reach the hardware stage in time for use in the Apollo Program.

4. The analog approach was relatively simple and straightforward, and suitable hardware and techniques already existed.

After responsibility for the CM TV system was transferred from the communications contractor to the CM prime contractor in 1963, the latter awarded a subcontract to build an analog camera for use in the Block I CM. The camera was therefore classed as contractor furnished equipment (CFE) and was designed to conform to the recommendations resulting from the previous study programs. These cameras were built but since no manned Block I spacecraft was flown, their use was limited to testing and aircraft missions flying over the ground stations to evaluate the air-to-ground RF signal design. New television requirements imposed on the Block II part of the Apollo Program caused the retirement of the Block I TV cameras and they were placed in bonded storage.

With the initiation of the Block II CM program, a requirement was established to provide a single TV camera system that could operate both in the CM and on the lunar surface. The purpose of this camera on the lunar surface was to view the astronauts after the LM had landed and to obtain some scientific information with high-resolution video data. The camera was to operate during the extremes of lunar day and lunar night and be capable of viewing objects lighted only by earthshine; that is, view scenes having low light intensities.

In October 1964, a contract was awarded to design and build a black-and-white TV camera system satisfying the requirements stipulated in the Block II CM program. To satisfy the low-light-intensity requirements, the camera was to use a patented image sensor that was being developed by the contractor at that time.

As the Block II CM program progressed, a weight-reduction program caused the TV camera to be deleted from the CM and to be stowed in the ascent stage of the LM. Concern about the weight of the LM ascent stage prompted a subsequent relocation of the TV camera on the MESA pallet in the descent stage. The camera was to be positioned so that, when the MESA was opened, the camera could televise the astronaut descending on the ladder to the lunar surface. This method of operation was subsequently used during the Apollo 11 mission to televise man's first steps on the moon.

In May 1967, the requirement for a TV camera in the CM was reinstated. The camera was required to monitor the crew compartment during hazardous testing of the spacecraft on the ground. For this purpose, the camera had to view all three crew couches simultaneously and to be mounted so as to withstand the vibrations and accelerations of launch. Studies and tests of positioning and mounting the Block II TV camera in the CM disclosed that an adequate field of view could not be attained with the existing complement of lenses and that, because of the structure of the camera, large, heavy brackets would be necessary to stow the camera in the required position. Therefore, even if a lens with a larger field of view were made available, use of this camera in the CM would not be practical.

Because the GFE TV cameras built for the Block I CM were smaller and easier to mount in the CM crew cabin and because the electrical parameters of these cameras were compatible with the Block II CM, it was decided to refurbish these cameras and incorporate a lens with a larger field of view. A special bracket was designed and built so that the TV camera could be properly positioned in the CM, and a contract was awarded for refurbishing and retesting the cameras and for providing a 160° field-of-view lens.

During ground testing of the Apollo 7 CM, the requirement for a TV camera in the CM for safety monitoring of the crew was deleted because monitoring was performed from outside the spacecraft through a window. After that time, the flight TV camera was used only in flight.

An exception to stowing the Block II TV camera in the LM descent stage occurred during the Apollo 9 mission. It was decided that the camera should be operated from space through the LM communications system before the camera was used on the lunar surface. Therefore, the camera was operated from the LM cabin during the mission. Because Apollo 9 was an earth-orbital mission, the requirement for televising from the CM was deleted and no CM TV camera was put on board.

In late 1968, several systems for transmitting color video information from an Apollo spacecraft were investigated and evaluated by MSC personnel whose objective was to provide a color TV camera for the Apollo 10 mission. The system most feasible to be implemented within the brief time available was a color-wheel, field-sequential system using special ground-based equipment to convert the signal to a standard color TV signal as defined by the National Television System Committee. A search of TV camera manufacturers disclosed that one company had a camera available that satisfied most of the environmental and quality requirements of Apollo flight hardware. A contract was awarded to the company to provide a color TV camera using the color-wheel concept for generating color information as a field-sequential video signal. In a joint effort, contractor and MSC engineers designed the required camera modifications and the interface electronics that made the camera compatible with the spacecraft. While the color camera was being fabricated, MSC and Goddard Space Flight Center (GSFC) engineers evaluated and reconfigured the transmission lines and ground-station equipment to ensure receipt of a good-quality color signal and its subsequent release to the networks. At the same time, a team of MSC and contractor personnel designed, fabricated, assembled, tested, and installed the equipment necessary to correct the TV signal for Doppler effects and to convert the sequential signal to the standard color TV format. During the last testing phase of the spacecraft on the launch pad, MSC and Kennedy Space Center (KSC) engineers verified the compatibility of the CM camera with all other spacecraft systems and electronics. This type camera was used on the Apollo 10, 11, and 12 missions and is scheduled for CM use on all subsequent Apollo missions.

In the weeks before the Apollo 12 mission, a decision was made to attempt to build a TV camera that would generate a field-sequential color video signal and thereby provide color telecasts from the lunar surface. The camera chosen was the same type used in the Apollo 10 CM, but modified to withstand the rigors and vibrations in the LM during the launch and the extremes of the lunar thermal/vacuum environment. An adapter cable was also designed to allow the camera to be connected to the existing 100-foot-long lunar TV cable and to provide the necessary attenuation of the camera output for proper operation with the LM communications system. The camera was used on the Apollo 12 mission to provide the first color telecast from the moon.

Command Module TV Camera System

Requirements and technical approach. - To ensure that the camera would be compatible with the Block I CM and associated electronic equipment, the requirements for the camera included the following considerations.

3. The camera was to operate on 28-volt dc spacecraft power.

4. The camera was to provide an output that would not overdrive the communications system frequency modulator, but that would provide a signal adequate to transmit a good-quality signal.

5. The camera was to use highly reliable components.

6. The camera was to be compatible with the CM environment and atmosphere.

7. The camera was to satisfy the safety requirements of Apollo flight hardware.

The CM TV camera (fig. 2) used existing hardware and techniques to satisfy the schedule for the Apollo Program. To satisfy the bandwidth requirement, a 10-frame/second scanning rate with 320 active lines/frame was used. Because the camera was to be used in the mild environment of the CM, primary emphasis was placed on low power consumption, small size, light weight, ease of operation, and high reliability. A 1-inch vidicon was used for this design, and integrated circuits were used wherever possible; the configuration and dimensions of the camera are shown in figure 3.

Figure 2.- Command module TV camera (black and white).

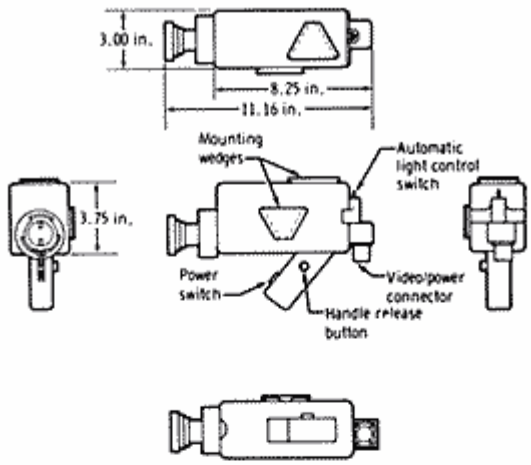

Figure 3. - Configuration of CM TV camera.

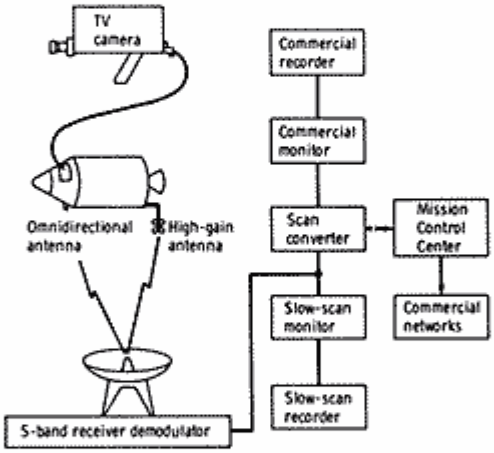

Figure 4. - Inflight TV monitoring and transmission system.

Engineering hardware and testing. - Four engineering-model CM cameras were shipped to the CM prime contractor's facility to undergo system-compatibility tests. Testing included both hardlining the camera video from the CM to ground test equipment and transmitting the video signals through the CM S-band communications system.

Two cameras were later assigned to GSFC for air-to-ground transmission testing. For these tests, a camera was flown in an aircraft equipped with an S-band transmitter and an antenna system to simulate the CM transmitting system. The video-modulated S-band signal was transmitted to a typical ground station where the video was demodulated and evaluated. Test results were satisfactory and demonstrated the compatibility of the system design (fig. 4).

Two qualification cameras were fabricated and tested while the flight camera systems were being produced. The qualification tests were conducted in accordance with the environmental requirements of the Block I CM equipment. All qualification tests were completed on time, and the tests were accomplished without major equipment changes or test modifications.

Flight hardware. - Six flight camera systems were fabricated for use on the Block I CM, but the cameras were not used on a manned Block I mission. Five of the units were later refurbished and retested for use on the Block II CM; two of the cameras were used on the Apollo 7 and 8 missions. During the refurbishment program, a 160° field-of-view lens was provided for the cameras. This hardware was given a preinstallation acceptance test before use in the CM. The system was also checked out with the CM during the normal preflight spacecraft testing.

Lunar-Surface TV Camera System

Requirements. - During early planning for the Block II CM, the TV camera was to be launched in the CM for use during the translunar-coast phase of the mission. Then, in lunar orbit, the camera was to be transferred to the cabin of the LM until

lunar touchdown. On the lunar surface, the camera was to be used during the thermal/vacuum extremes (±250° F and 10^{-14} torr) of the lunar night and lunar day with the sun at the zenith. The camera was also required to provide a good video picture when the scene was illuminated only by earthshine; that is, the camera had to be capable of televising scenes with low light intensities. After the lunar-surface phase of the mission, the camera was to be restowed in the LM and transferred to the CM after rendezvous for use during the transearth-coast phase of the mission. The camera had to operate in the CM and LM environments (100-percent salt-contaminated humidity and 100-percent oxygen atmosphere) and withstand the entry deceleration and landing shock without damage.

The camera was required to operate on primary power of 24 to 31.5 volts dc with a maximum power drain no greater than 6.5 watts from either module. The video output to either module was required to be adequate to provide a good signal-to-noise ratio and yet not so great as to cause overdeviation of the frequency modulator; these requirements implied that the video-signal level going to each spacecraft communications system had to be unique.

The TV camera system was constrained to operate within a 500-kilohertz bandwidth and to provide both high-resolution pictures and acceptable motion rendition, although not necessarily at the same scanning rate. The signal-to-noise ratio for the camera output had to be greater than 28 decibels for the scanning rate giving motion rendition and greater than 25 decibels for the high-resolution scanning rate. Other requirements included a contrast ratio of at least 7 logarithmic gray-scale steps, a dynamic range of light-intensity input of 12 000 to 1, and an aspect ratio of 4 to 3.

Because the equipment was to be space-flight hardware, it had to satisfy the requirements of minimum weight and size. At the same time, human-factor considerations had to be applied, because the suited astronauts would be operating the equipment on the lunar surface.

Technical approach. - To achieve the thermal requirements imposed on the design of the TV equipment, it was decided to provide a passive thermal control system consisting of a uniquely shaped camera case (fig. 5), thermal paint that would radiate heat from the top of the camera, and a high-reflectance surface for the sides and bottom of the camera. To allow operation during the extreme cold of the lunar night, two metal shields that could be bolted to the top of the camera were provided to prevent radiation of heat from the camera; the configuration and dimensions of the camera are shown in figure 6.

Vibration and shock requirements were satisfied by ruggedizing the image sensor and providing a mounting bracket with built-in vibration and shock isolation. One type of bracket was provided for stowing the camera and accessories in the CM, and a second type was provided for stowing the camera in the LM. Separate containers were provided for stowing the lenses in the LM.

The requirement for low operating power was satisfied by using integrated circuits wherever possible. The individual video-output levels needed for each module were attained by providing separate cables with appropriate attenuation for each of the

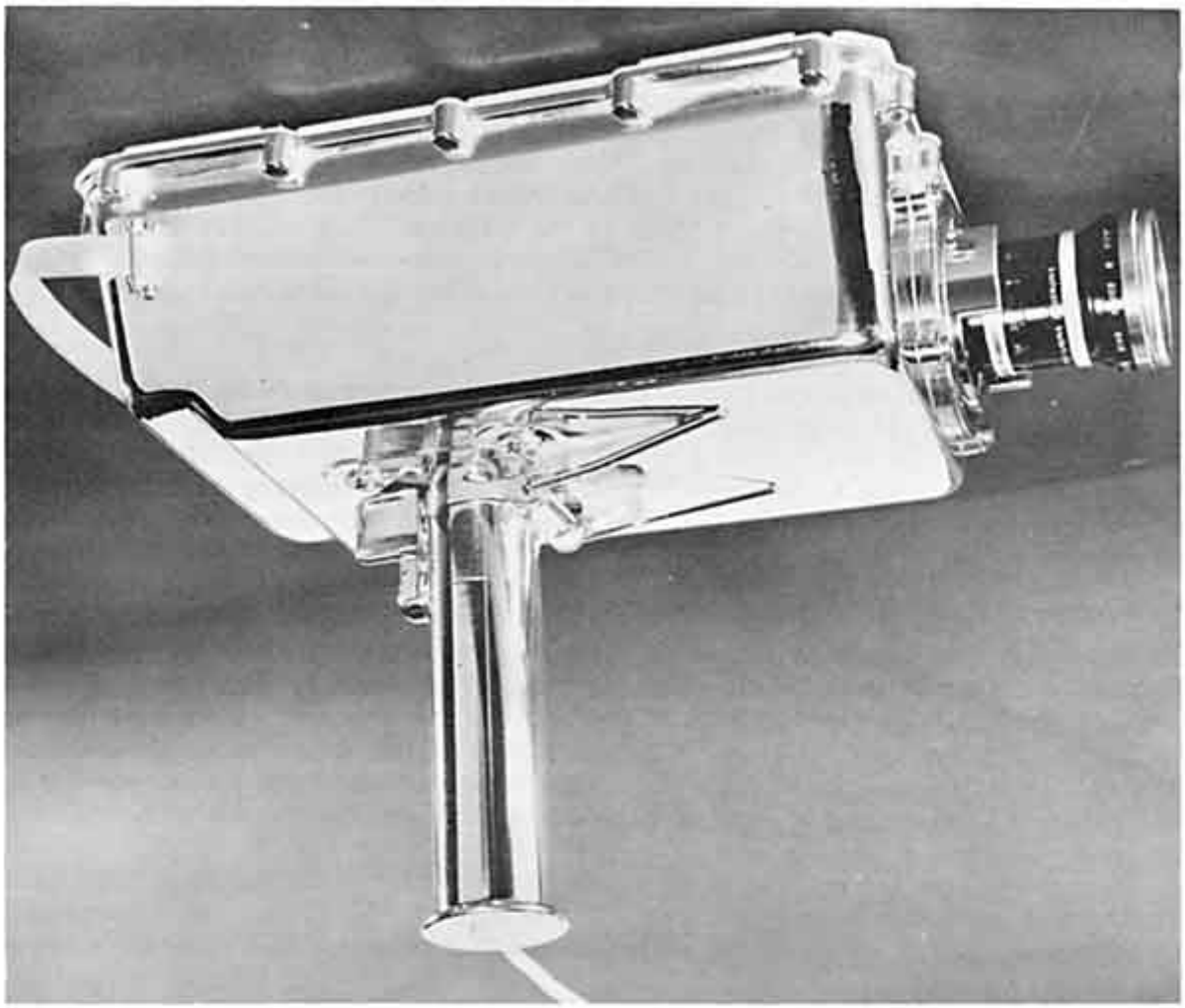

Figure 5. - Lunar-surface TV camera (black and white).

required levels. Later, when the camera was required to operate on the lunar surface at the end of the 100-foot-long cable, the interface impedance network of the cable was also designed to provide the proper video levels into the LM communications system.

To achieve the requirement of a 500-kilohertz bandwidth while providing motion rendition, a 10-frame/second scanning rate with 320 active lines/frame was chosen. The result was a video picture with a resolution of approximately 200 TV lines referenced to the picture height. This system produced essentially the same type picture as that provided by the earlier CM TV system. A second scanning rate of 0.625 frame/second with 1280 active lines/frame was chosen to provide a higher resolution picture of approximately 500 TV lines per picture height within the constraints of the sensor limitations.

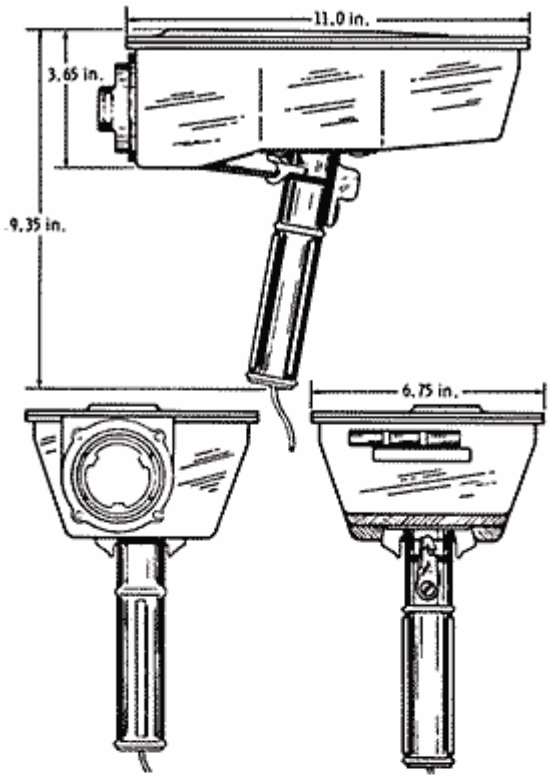

Figure 6. - Configuration of lunar-surface TV camera.

To ensure a good lock on the received video signal at lunar distances, synchronization signals were designed as bursts of a 409.6-kilohertz sine wave (fig. 7) that was phase locked to the internal reference clock. A block diagram of the camera is shown in figure 8.

To achieve the capability of televising scenes with low-light-intensity levels, a patented image sensor was chosen for the camera. To compensate for the high light intensities encountered during the lunar day, the lenses for daytime use were provided with neutral-density filtering, which increased the light attenuation and allowed proper operation of the camera. The lens used during the lunar night was given as large an aperture as possible to admit most of the available light.

To achieve minimum weight and size, microminiature circuits were used to the greatest extent possible. The resultant TV camera weighed 7.5 pounds and had dimensions of 3.65 by 6.75 by 11 inches.

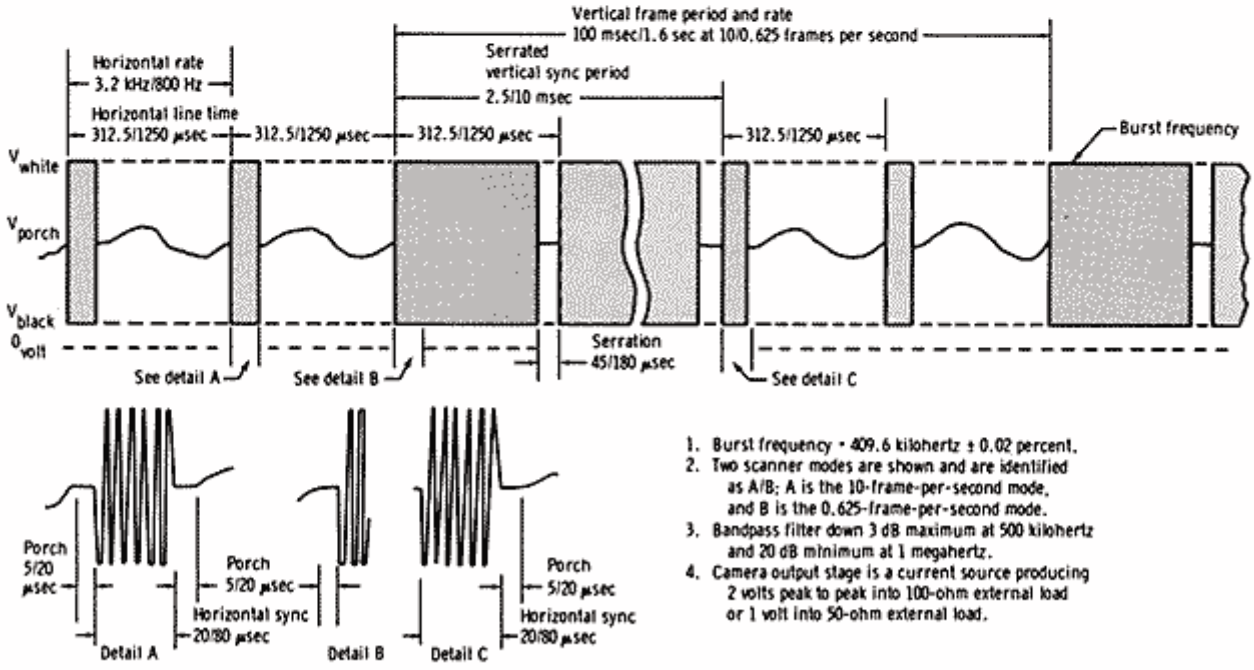

Figure 7. - Composite video and synchronization format of lunar-surface TV camera.

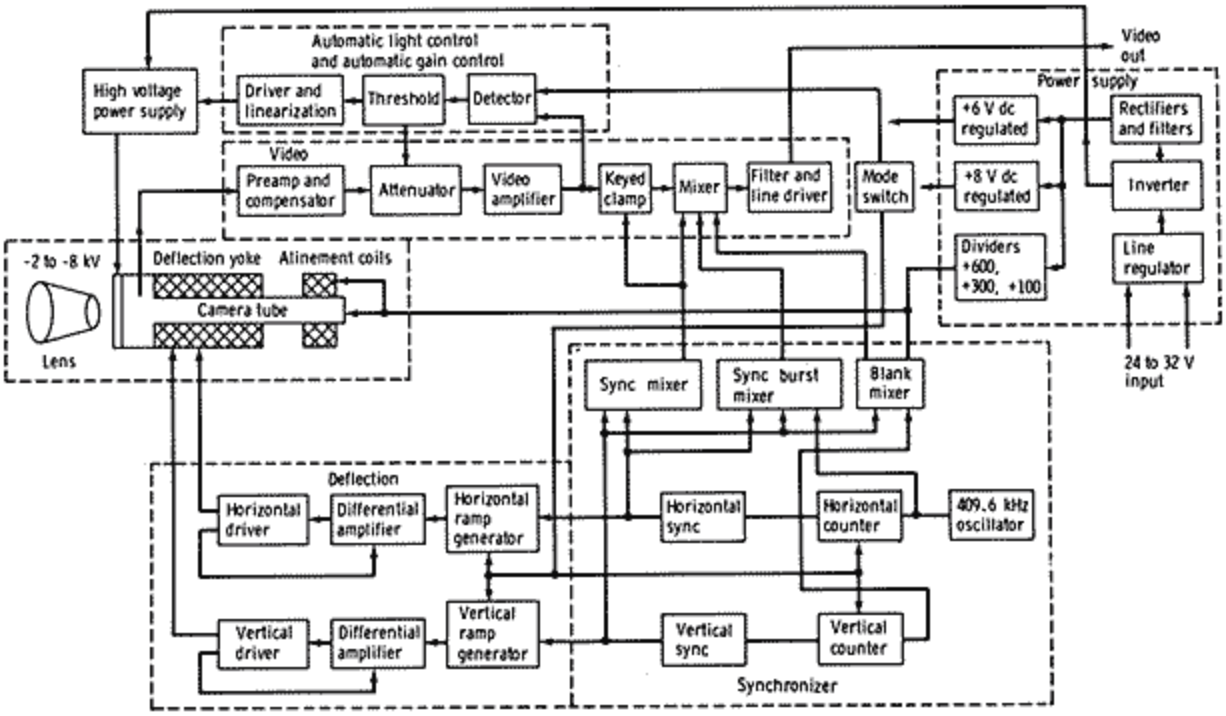

Figure 8.- Block diagram of lunar-surface TV camera.

To achieve good pictures of the scenes to be telecast, four lenses (fig. 9) were provided for the camera. These lenses could be changed by a suited astronaut on the lunar surface. One was a wide-angle lens for use primarily in the LM or CM. A second lens, called the lunar day lens, provided an intermediate field of view for use at short ranges on the lunar surface. A third lens was a telephoto lens for long-range use. The fourth lens, the lunar night lens, had an intermediate field of view for general-purpose use at night (earthshine lighting conditions).

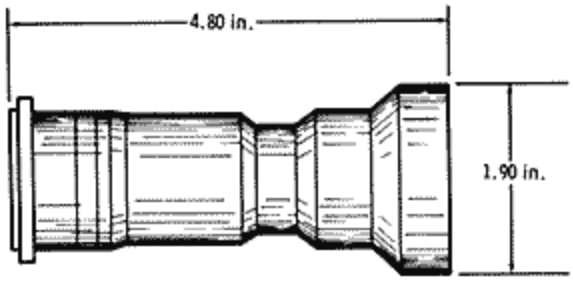

(a) Telephoto lens.

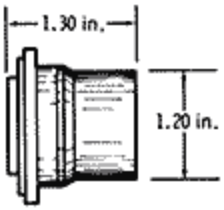

(b) Wide-angle lens.

Figure 9.- Lenses used on lunar-surface TV camera.

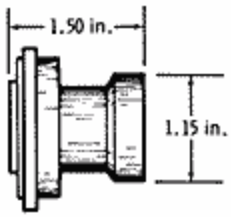

(c) Lunar day lens.

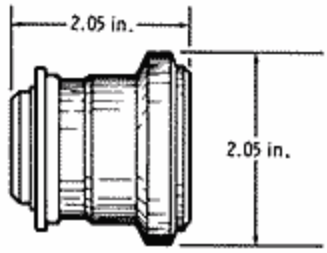

(d) Lunar night lens.

Figure 9.- Concluded.

Engineering hardware and testing. - Seven engineering models of the lunar-surface TV camera system were constructed. One was a prototype used to verify the electrical design of the system. The other six, constructed essentially identical to the flight units, were termed service test model (STM) cameras. These cameras were used at the CM prime contractor's and the LM prime contractor's facilities for compatibility testing with the respective modules. One unit was retained at each facility for checkout of all subsequent modules. Testing included both hardlining the camera video from the spacecraft to ground test equipment and transmitting the video signals through the spacecraft S-band communications system. One camera was provided to GSFC personnel for air-to-ground transmission testing and verification of compatibility with the ground stations. As in the tests with the CM TV camera, a lunar-surface TV camera was flown in an aircraft equipped with an S-band communications system to simulate the spacecraft communications system. The S-band signal, modulated by the TV video, was transmitted to a typical ground station where the video was demodulated and evaluated. These air-to-ground tests verified the overall adequacy of the system. Another camera was provided to KSC personnel for verification of the testing network for the preflight spacecraft checkout.

One STM camera system was also used for qualification testing. These qualification tests were defined for the Block II CM and verified that the camera, used with the proper accessories, could withstand all the expected environments. Completion of all qualification testing was accomplished before the flight cameras were used. No significant equipment or procedural changes were required as a result of the qualification testing.

Flight hardware. - Production of flight hardware began after verification of the compatibility of the camera system (using the STM cameras) with the CM and LM. Seven flight units were produced. One of these units was operated in the LM on the Apollo 9 mission. A second unit, stowed in the MESA of the LM on the Apollo 11 mission, functioned for several hours during the lunar-surface extravehicular activities. A third unit in the LM cabin was to be used as a backup TV camera during the Apollo 13 mission.

Three additional flight-qualified cameras were scheduled to be fabricated to an assembly level. These cameras, called "P" cameras, were to be used for providing spare parts for the flight cameras. However, a failure occurred during testing of one

of the "P" cameras. The remaining two "P" cameras were later completely assembled to provide ready spares for the flight units; however, one "P" camera was downgraded and used for STM testing.

During testing of an LM test article in the thermal/vacuum facilities at MSC, a requirement was established to provide real-time TV monitoring of the LM cabin during a phase of a simulated mission in which bright lighting could not be used. A lunar-surface TV camera was requested because that type is qualified to operate in the oxygen atmosphere of the cabin and has the unique capability of televising scenes with low-light-intensity levels. An STM camera was retested and qualified to function for this purpose to avoid the use of a flight camera.

Color TV Camera Systems

Requirements. - To ensure that the color TV camera (fig. 10) would be compatible with the Block II CM and associated electronic equipment, the camera requirements included the following considerations.

1. The video bandwidth was to be flat to 2 megahertz.

2. The camera was to be provided with a 6-to-1 zoom lens capable of a near-focus distance of 28 inches.

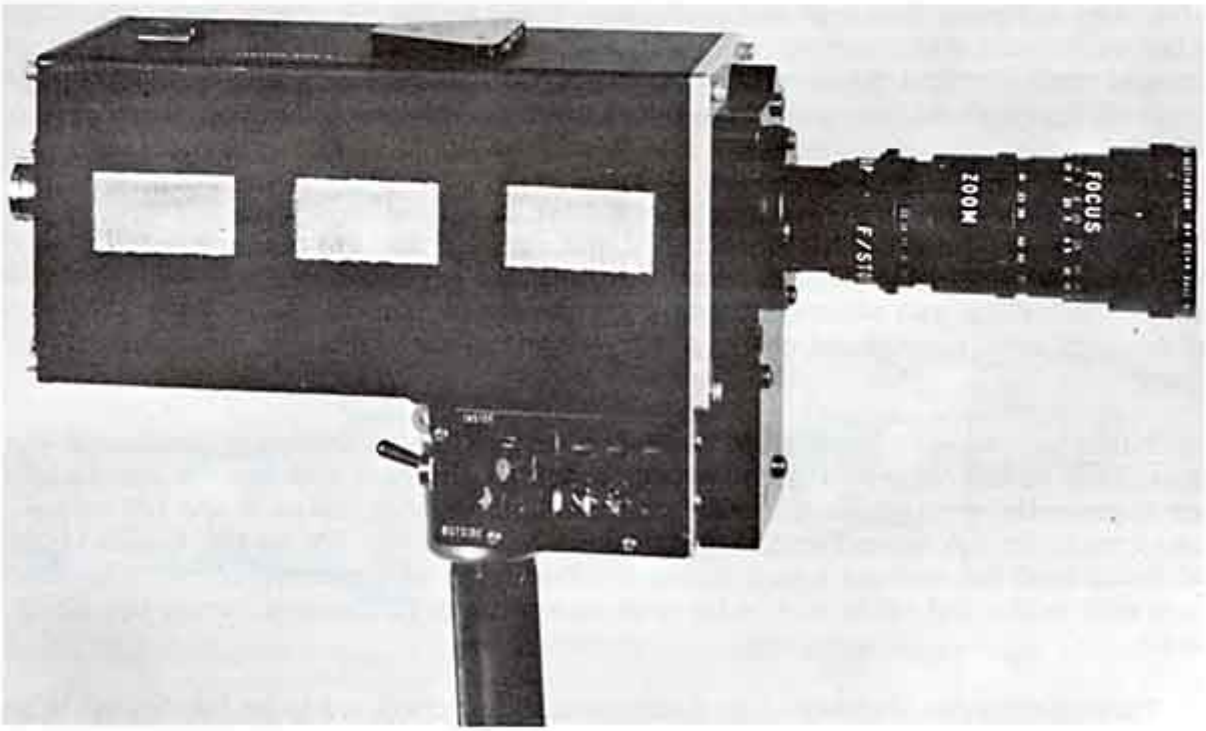

Figure 10. - Apollo color TV camera.

3. The camera was to be operated from primary spacecraft power.

4. The camera was to be compatible with the CM environment and atmosphere.

5. The camera was to satisfy the safety requirements of Apollo flight hardware.

The basic camera design was that used for the lunar-surface TV camera, the contractor for which, using much of the design experience gained fabricating that camera, had designed a black-and-white TV camera for another Government agency. This second-generation camera (with the addition of a field-sequential color filter wheel) was chosen as the design for two flight color TV cameras. The only modification, other than adding the color filter wheel, was changing the basic clock frequency from the monochrome frequency standard to the U.S. color standard. A block diagram of the camera is shown in figure 11.

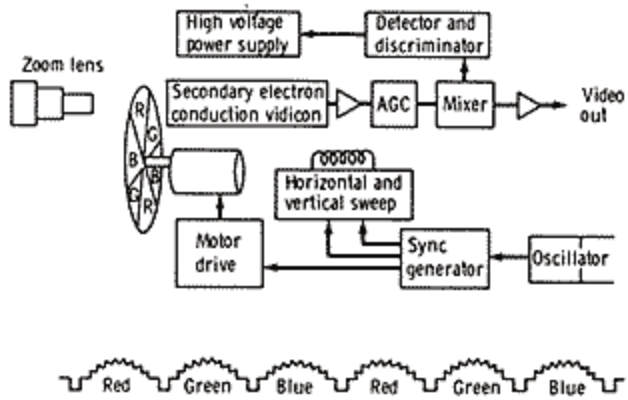

Figure 11. - Block diagram of Apollo color TV camera.

Engineering hardware and testing. - One qualification camera and two flight cameras were fabricated. The flight cameras underwent system-compatibility tests with the CM. Testing included both hardlining the camera video from the CM to ground test equipment and transmitting the video signals through the CM S-band communications system. The qualification camera was tested for thermal/vacuum, vibration, and cabin compatibility.

After the Apollo 11 mission, the Apollo 10 CM camera was modified for lunar-surface operation on the Apollo 12 mission. The original CM qualification camera was tested to the additional LM requirements. The modified Apollo 10 camera was tested with the LM transmission link and used on the Apollo 12 mission (fig. 12).

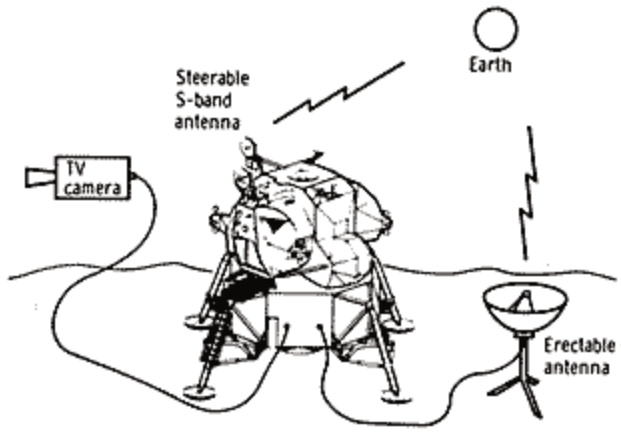

Figure 12. - Inflight TV transmission system.

DESIGN/DEVELOPMENT TASKS

The lunar TV camera program was an unusual type of development contract that covered not only the development of a camera, fully space qualified, but also the development of the sensor tube itself. Essentially parallel development of two products, one of which was dependent on the other, was required. Inherent delays and expense resulting from a comprehensive reliability and quality assurance program were drastically increased when designs had to be discarded and redone as a result of changes to the sensor itself. Also, very little was known regarding the handling of high voltage in critical pressure regions, and physical changes in the sensor tube frequently resulted in a complete reevaluation of the problem and, in some cases, major mechanical redesign of the tube-mounting hardware. In spite of all the problems experienced in the development of the lunar TV camera as a result of pushing the state of the art in sensor development, camera development, and microcircuit development while requiring space-type reliability and quality assurance, this was a successful program. The requirements for space and weight reduction, low-light-level sensitivity, low power, and limited-system bandwidths did not seem compatible with TV for general public use. However, the program resulted in the first space TV system that could provide high-resolution pictures for scientific use and acceptable motion rendition for general public use.

Some of the design/development tasks are discussed in the following paragraphs. This information is drawn from records that still exist. As in any large program, many other problems existed, both large and small, that were never documented, or this documentation has been discarded and now exists only in the memories of the principals. Undocumented problems are not discussed.

Secondary-Electron-Conduction Tube

The secondary-electron-conduction (SEC) camera tube represents the culmination of efforts to produce a sensor tube of balanced design with high sensitivity, fast response time, simplicity of operation, compactness, ruggedness, and lightweight construction. The basic feature of the tube is the high-gain, fast-response SEC target, which makes it possible to obtain high sensitivity and low-lag performance. The use of electrostatic focus, magnetic deflection, and a low-power heater-cathode structure resulted in major weight, size, and power savings.

The entrance window consists of a plano-concave fiber-optic mosaic with a nominal fiber diameter of 7 microns and a numerical aperture of 1. To prevent light jumping from one fiber to another, each fiber is clad, giving a low index of refraction. In optical bundles, a second cladding of opaque material is normally placed around each fiber so that light outside the acceptance angle is absorbed. Early double-clad mosaics of this type produced flaws or spots, some of which were quite large. New specifications for blemishes are shown in the following table and in figure 13.

Spot size, in.	Number allowed		
	Zone 1	Zone 2	Zone 3
0.0014	Not counted	Not counted	Not counted
0.0014 to 0.0034	2	1	2
0.0035 to 0.0045	0	0	1
0.0045	0	0	0

Also, the minimum separation between any two counted spots must be 0.0347 inch. There are no requirements for zone 4.

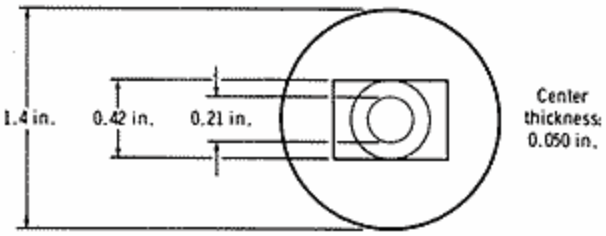

Figure 13. - Faceplate of image sensor.

Various programs and experiments were performed to determine the optimum size of the target. A computer program determined the electric field distribution around the specified electrode configuration and then plotted electron paths in such a way as to determine the sagittal and tangential foci corresponding to various cathode points. Precise spatial location of the compound surfaces was difficult to establish, but experimental data supported the computed data. Because the magnification was as much as 1.4 at the edge of a 1-inch target, the target size was reduced. Visually noticeable distortion is seen with picture diagonals of 0.75 inch and are unnoticeable at diagonals of 0.625 inch. To meet distortion limits, the 0.625-inch diagonal was used.

To optimize focus in order to minimize the loss of resolution, the length of the image section was increased. However, the smaller target offered major advantages. The target-mesh capacitance was reduced from approximately 40 to approximately 18 picofarads. This shunt-capacitance reduction resulted in a significant improvement in signal-to-noise ratio. Resonances experienced during vibration testing were found to occur at higher frequencies and at reduced amplitudes. The smaller target was thus a more rugged device.

Studies were also made on the effects of supressor mesh on resolution. These studies resulted in the installation of a 1000-line/inch mesh instead of the 750-line/inch tube originally used. Amplitude response gains as great as 50 percent were obtained.

Much effort was expended in the design of a suitable gun. Some of these changes, although not affecting the size of the tube, did affect applied voltages and resulted in redefinition and redesign of external driving circuits. A critical area of gun design centered around the heater-cathode assembly. A 0.2-watt assembly was proposed to be procured from another manufacturer. Initial devices received did not meet emission requirements, so a parallel development effort was started by the TV camera

contractor. This effort eventually resulted in a heater-cathode assembly with ample reserve emission capability that was ultimately used in the sensor.

Corona

Very little was known about corona, especially near the critical pressure region. An approach was agreed upon by NASA scientists and researchers at the contractor research laboratories as a result of studies and tests of various materials. This approach was to enclose completely all high voltages in a material of known dielectric qualities and to plate the exterior surfaces with an electrostatic shield.

In areas of critical pressure, corona or arcing may be expected in the following areas.

1. Voids in the potting material at the interfaces of two dielectrics

2. Interface between two bonded dielectrics of the same type

3. Outer surface of dielectric

If a void should exist at the interface between two dielectrics, the dielectric strength may be weakened and a source for corona or glow currents created. The probability of failure could be increased by a leakage of these voids to the outside, especially at the reduced air pressures of high altitude. The interface of bonded dielectrics of the same type exists because of the physical impossibility of potting the complete tube assembly and power assemblies simultaneously. The outer surface of a dielectric surrounding a high potential will eventually assume the potential enclosed, because no insulator is perfect. If the potential is high enough, it will discharge to the nearest ground in the form of a spark. This spark will not be sustained because of the very high resistance of the insulation in series with the low resistance of the ionized air caused by the spark, which immediately reduces the potential at the surface of the insulation to near zero. This process will repeat itself at a rate that is dependent on insulation resistance, potential on the conductor, distance to ground, and air density. The existence of this charge is prevented by coating the dielectric with a grounded conductive film.

Several voltage levels must be accounted for; as much as 8 kilovolts are required at the tube photocathode, and various voltages up to 600 volts are required at the base. The lower voltage sources (that is, the transformer and voltage multiplier and all associated circuitry) are enclosed in an epoxy potting material, and all external surfaces are electroplated with a conductive material, such as copper or nickel-gold, which is then grounded. The high-voltage section is treated similarly. A combination of polyimide and an elastic room-temperature-vulcanizing (RTV) silicone rubber is chosen, which avoids thermal expansion problems. A ground is provided by a combination of electroplated material and thin, conductive sheet metal. The points of juncture between the voltage sources and the tube are potted in RTV silicone rubber at assembly, and conductive screening is electrically bonded to adjacent grounded surfaces. Procedures assure that solid dielectric entirely fills the space between high-voltage leads and grounded surfaces.

Treatment of the tube faceplate is unique. It was found that impurities in the faceplate can result in the photocathode voltage appearing on the outer surface of the faceplate. The solution to this problem was to treat both sides of a glass plate with a transparent conductive coating. This glass plate is then cemented to the tube faceplate, the adjacent side connected to the photocathode and the outer surface connected to ground.

As noted previously, in all cases, all high voltages are coupled to ground only through a solid dielectric and all arcing or corona is eliminated. However, if an arc should occur, it would be retained in the potting-filled spaces and could not get outside the assembly.

Connector/Cable

A line of connector/cable assemblies had to be developed to perform under the severe environmental requirements and to withstand the pulling, bending, and maneuvering that the cable experiences as a result of its being an extension cable for a portable TV. A considerable amount of mechanical strength is required at the connector/cable junction to guard against breakage or damage to a wire or a solder joint while the camera is being moved about. Flexibility is also desirable because of moving the camera about and because of coiling the cable for storage.

The electrical requirements of the coaxial cable permitted the use of a small shielded conductor with its inherent flexibility. Simple, Teflon-coated wire was used for power connections. These wires (two Teflon-coated and one coaxial) were enclosed in a glass braid (fig. 14). Electrical requirements were such that the coaxial wires were carried through the connector noncoaxially.

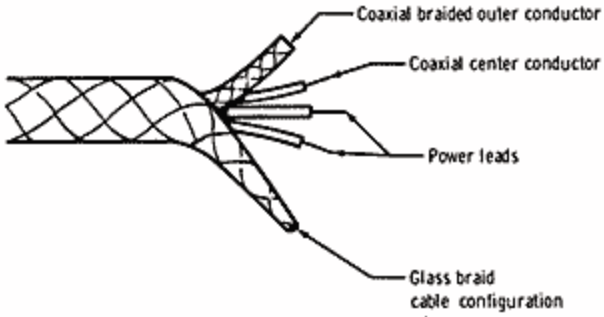

Figure 14.. - Cable configuration.

Because of the "extension cable" usage, the connector/cable joints could experience a considerable tensile force. With only four soldered connections in a normal connector, very little strength would be provided, because cable clamps offer protection from bending only. A sketch of the resulting design is shown in figure 15. The sketch shows the essential features of the cable anchor in the connector, as developed by the TV camera contractor. The cable is opened up and each conductor, as well as the braided sheath, is lashed to the Teflon spool. Because the individual conductors are separated, bend radius and tightness of tie are no longer

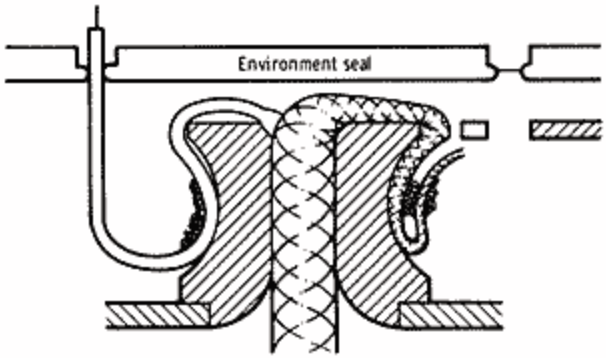

Figure 15. - Connector/cable joint.

damaging, and a tight, compact anchor is provided. For added protection and security, the elements may be folded back and tied twice or more, as shown in the figure.

The principal operating and nonoperating environmental and operational conditions met by this cable/connector design were as follows.

1. High vacuum
2. Explosive atmospheres
3. Oxygen atmosphere
4. Humidity and salt fog
5. Vibration
6. Human factors
7. Pulling, bending, and maneuvering the cable and cable/connector junction

Thermal Design

The thermal design of the TV camera permits operation on earth, in the spacecraft cabin, and on the lunar surface. On earth, the cooling mechanisms of convection and radiation are effective, with convection being the most important. However, in the spacecraft cabin environment of 5-psia oxygen, the role of convection is drastically reduced; on the lunar surface, it is eliminated.

Techniques for cooling could have been active, semiactive, or passive. An active cooling technique that would be compatible with hard-vacuum conditions would make use of the "water boiler" or evaporation principle. A fluid would be stored in a sealed chamber of the camera, and a pressure-relief valve would be preset to the pressure at which the boiling point of the fluid equalled the desired camera-operating temperature. In the evaporative system, the fluid would pass through a porous plug and evaporate as long as enough heat were supplied to keep the plug temperature above the freezing point of the fluid. These techniques would require that the coolant be replaced periodically — a most undesirable feature. However, it was determined that passive cooling would be adequate and feasible.

Major problems stemmed from the fact that, while on the lunar surface, the camera receives energy from various sources, as follows.

1. Direct solar energy: 443 Btu/hr/ft^2
2. Reflected solar energy: 22.15 Btu/hr/ft^2 (5 percent albedo)
3. Emitted lunar-surface energy: 435 Btu/hr/ft^2
4. Internally generated energy: 6.5 watts during operation

The camera is designed to have minimal thermal coupling with the lunar surface and the sun and to have maximum radiation to deep space. The top surface of the camera (which faces the sun and deep space) is coated with a white paint having high emissivity (0.87) and low solar absorptivity (0.18). The remainder of the camera, which faces the lunar surface, is finished with highly polished silver plating with a very low emissivity (0.04) and a low absorptivity (0.02). During lunar night operation, the emission must be reduced to maintain the proper camera-operating temperature. This is accomplished by placing radiation shields of silver-plated aluminum on the top surface of the camera.

To accomplish passive thermal control successfully, particular characteristics of surface finishes had to be met. The highly reflective coating (with an emissivity of 0.04 and an absorptivity of 0.02) was a high-luster silver and was protected by a tarnish preventative. The white surface on the top, where high emissivity was required, was a paint, and severe adherence problems were encountered. Paint has a tendency to peel or flake off, especially when subjected to salt spray, humidity, vacuum, and ultraviolet radiation. The paint finally selected was able to withstand these unfavorable conditions. The paint was a white, titanium dioxide pigmented, silicone paint with an initial emissivity of 0.85 and an absorptivity of 0.14. This paint was available and only had to be qualified through a verification program. Two other paints considered were white-pigmented Tedlarfilm and white Kinar (vinyladene fluoride and titanium dioxide).

Synchronization

During preliminary camera design (test-bed camera), pulse synchronization had been chosen because of its relative simplicity and low cost. However, the stability of this approach was not sufficient for use during a flight mission, when the information being transmitted would be real time converted to broadcast TV rates. The required and specified accuracy was ± 0.02 percent; this accuracy was obtained by using a crystal-controlled oscillator operating at 409.6 kilohertz. The output of the oscillator was shaped and divided by 128/512 to obtain the horizontal line rate. The horizontal rate was then divided by 320/1280 to obtain the vertical period. (The factor 128/512 denotes timing for each line in the 10- and 0.625-frame/second modes; 320/1280 denotes the number of lines in the 10- and 0.625-frame/second modes.) Difficulties were experienced in obtaining a synchronizer that could operate over the required environmental extremes. These difficulties stemmed mostly from propagation-delay differences between microelectronic devices available at that time and propagation-delay variations with temperature. Problems also arose because of the incapability of devices to yield constant outputs for varying loads and because of susceptibility to noise on the power supply lines. These problems were resolved as the state of the art of molecular circuits advanced to the point that limit specifications could be set by design and met in manufacture.

Viewfinder

During the early stages of development, several viewfinder configurations were considered, as follows.

1. Beads located at front and rear

2. Negative lens with a wire frame

3. Foldable sheet-metal frame

The bead viewfinder consisted of a bead at the front of the camera and a bead at the back. Stowage problems were minimized, but, because this system did not outline the scene, it was originally discarded. However, human-factors studies found that, with the particular lenses being used, the disadvantages found in the negative lens and the sheet-metal frame were enough to reject them. For instance, the primary purpose of the wide-angle lens is to view close scenes. A framing viewfinder would, therefore, be quite large. The 25-millimeter lens is primarily intended for viewing general scenery. The astronaut, after choosing an object of interest, would tend to place this object near the center of the picture. Other areas of objects included in the scene are of little or no interest. The 100-millimeter lens is intended to view distant objects and has a very narrow field of view. In this case, the camera must be aimed directly at the object of interest.

A negative lens with a wire frame outlines the field of view, can be folded for stowage, is rigid, and has small susceptibility to damage. Because the image is small, it is difficult for the operator to tell exactly what is being viewed. Other disadvantages are weight (too heavy) and reflections that may be annoying to the operator. Also, a second wire frame would be required for the 100-millimeter lens.

A foldable sheet-metal frame can be made semirigid; it outlines the field of view, can be hinged for compact stowage, is light, and produces no reflections. Two frames are required for use with the 25- and 100-millimeter lenses, increasing volume and increasing damage susceptibility. During the normal evolution of the camera case, a ridge running from back to front was designed into the top cover of the camera. Experiments were conducted using this edge as an aiming device, and it was found that this aiming method was adequate.

Suited Operation

When the astronaut is suited, most motor functions become more difficult. Simple finger and arm motions are not possible without extreme exertion. Because of this, numerous studies were made to determine optimum shapes; the sizes and angles of handles; and the optimum method of changing lenses, throwing switches, and determining temperature.

The switch problem was solved simply by mounting a lever on top of the camera; the lever is swung through a 60° arc. Because a rather wide temperature range is considered operational, a liquid indicator in a tube is used. The tube is viewed in two places. If liquid is visible in both ports, the temperature is too high; if liquid is not

visible in either port, the temperature is too low. As long as liquid is visible in one port only, operation is acceptable. Temperature determination is thus reduced to a "go" or "no go" condition.

Because several lenses are required for wide, normal, and narrow viewing angles and for lunar day and night operation, considerations had to be given to various schemes for changing lenses. Perhaps the simplest for the astronaut would have been a turret, with part of or all of the lenses mounted thereon and requiring only rotation of the turret to select the desired lens. However, the mass associated with a turret would increase the severity of vibration problems. Threaded lens attachment would be difficult when the astronaut is suited. Therefore, final lens mounting is by slot insertion and 30° rotation to a locked position.

For handling the camera when the handle is detached, a flexible handle was provided. A study was performed to determine optimum handle size, shape, and mounting position. It was intended to determine which type handle — pistol grip with sloping front and sloping back or tubular grip with sloping front and sloping back — resulted in the most efficient use of the camera. After all the studies had been made, no significant differences were noted. The selected handle was the tubular unit. This unit was selected because of its relative simplicity.

SPACE FLIGHTS AND PERFORMANCE

The types of TV cameras used on the various manned missions to date are shown in the following table.

Apollo television cameras		
Black and white		Color
Command module	Lunar surface	
Apollo 7 (earth orbit)	Apollo 9 (earth orbit)	Apollo 10 (lunar orbit)
Apollo 8 (lunar orbit)	Apollo 11 (lunar surface)	Apollo 11 (lunar orbit)
		Apollo 12 (lunar orbit)
		Apollo 12 (lunar surface)
		Apollo 13 (translunar coast)

Performance of all systems was adequate and as anticipated. Two anomalies have occurred to date.

The first anomaly occurred with the Apollo 8 CM camera. The camera was operated viewing the earth from such a distance that the earth filled only a small portion of the field of view. The camera operated normally, producing saturated views of the earth because the automatic light-level control could not adjust the camera sensitivity to compensate for the bright earth against the black field of space. The saturated views caused loss of resolution of earth features. A real-time fix was accomplished by the crewmen, who taped available filters over the camera lens.

The second anomaly occurred with the Apollo 12 color camera. The design of this camera was possible because of the high sensitivity tube used in this camera. It was recognized, however, that excessive amounts of light intensity could cause permanent damage to the sensor element. Sufficient precautions, including briefing the crew, were thought to be taken to avoid any damage. However, during initial deployment of the camera on the lunar surface, the camera was inadvertently pointed at the sun causing a light overstress which damaged the image sensor to the extent that a useable video picture could not be attained. This problem hastened completion of the development of new burn-resistant image sensors. These new types of tubes were used in subsequent spaceflight television cameras.

DEFICIENCIES IN DESIGN AND PROGRAM APPROACH

Other problems experienced during the design phase were as follows.

1. Tube filament selection
2. Target capacity processing
3. Tube blemish elimination
4. Yoke potting/alinement
5. Method of connecting lens to camera
6. Processing of materials to guard against cold welds

The tube filaments were selected to be low power in an effort to optimize the total camera system power consumption level. The effort expended in acquiring a nonstandard low power heater far exceeded the benefits gained in total power conservation. In retrospect, a much better selection would have been the standard, proven filament for a particular tube gun structure.

A major effort was expended in the achievement of a high capacity target at the expense of incurred tube blemishes. The higher capacity target is fabricated by reducing target thickness, which compounded the likelihood of blemishing.

The remaining three problems occurred because of lack of engineering knowledge concerning vibration levels, crew mobility, and reactions of materials in vacuum.

Additional program control approaches, which would have been highly beneficial, were as follows.

1. Produce a greater number of engineering models before stringent reliability and quality control surveillance

2. Provide a clear definition of man-rated-product requirements

CONCLUDING REMARKS

All television equipment has performed as designed. Significant advances and improvements were made during the period of development of the B/W television equipment. Some of these, such as the development of the low light intensity image sensor, enabled the development of the spaceflight color TV cameras. The best results were obtained from the color systems because of the availability of a wider bandwidth which allowed higher frame rates and consequently improved motion rendition while maintaining a commercial grade resolution.

The Apollo television development program suffered a number of cost, schedule, and design impacts (non-optimized design) as a result of the lack of positive and timely definition of the design requirements. Some of these requirements were finalized only after hardware was already designed and in some cases built. Extensive definition of the design requirements should be a prerequisite to the design and development of television systems for future programs.

Many design considerations evolved during the development and utilization of the television equipment. Some of these are related to the specific use of the individual camera, but in general, the following exemplify that type of information derived from the television development program.

(1) A prime consideration for all future television systems used for manned surveillance is to design and construct the equipment using commercial scanning standards and bandwidths whenever possible. This will allow extensive use of available off-the-shelf equipment and insure that the system is compatible with commercial networks.

(2) All cameras should use an image sensor (camera tube) which can accept a high intensity light input without damaging the sensing element in the tube. It was found that, although special precautions were taken to avoid damaging the tubes, high intensity light inputs were received during normal usage of the camera from specular reflections and bright objects in the scene of interest.

(3) Thermal control is mandatory for the cameras when a heat sink is not available. The degradation of the picture caused by high temperatures is an insidious problem that only becomes apparent after a significant amount of information is lost. Passive thermal protection can maintain proper operating temperature with thermal blankets and adequate reflecting surfaces.

(4) Since a great variation in scene brightness can be expected from the various applications of the cameras, the ALC (automatic light control) function in the cameras must be expanded to include several sensitivity settings. In conjunction with this, the lens should have a variable iris which functions automatically with the ALC and AGC

(automatic gain control) to regulate the sensitivity of the camera and to provide the best video display for any given scene. In lieu of an automatic iris, a manual control for the lens aperture can provide satisfactory ALC/AGC functions provided that operator training is adequate.

(5) Shock and vibration isolation proved to be necessary and adequate for the television equipment. No failures were noted due to vibration or shock during mission usage of the equipment. The many qualification tests performed to determine adequate isolation were largely responsible for this success. Analysis and test of vibration and shock should be considered mandatory for future programs.

(6) In the early television development program, individual interchangeable lenses were considered adequate for the television cameras. During the course of development and testing, it was found that a single zoom lens was more satisfactory from an operator and logistic viewpoint. The added complexity of the zoom lens with variable focus and iris was warranted by the added performance capability.

Lyndon B. Johnson Space Center
National Aeronautics and Space Administration
Houston, Texas, August 1, 1973
914-50-17-08-72

NASA-Langley, 1973 —— 31 S-300

NATIONAL AERONAUTICS AND SPACE ADMINISTRATION
WASHINGTON, D.C. 20546

OFFICIAL BUSINESS
PENALTY FOR PRIVATE USE $300

SPECIAL FOURTH-CLASS RATE
BOOK

POSTAGE AND FEES PAID
NATIONAL AERONAUTICS AND
SPACE ADMINISTRATION
451

U.S.MAIL

POSTMASTER: If Undeliverable (Section 158 Postal Manual) Do Not Return

"The aeronautical and space activities of the United States shall be conducted so as to contribute . . . to the expansion of human knowledge of phenomena in the atmosphere and space. The Administration shall provide for the widest practicable and appropriate dissemination of information concerning its activities and the results thereof."

—NATIONAL AERONAUTICS AND SPACE ACT OF 1958

NASA SCIENTIFIC AND TECHNICAL PUBLICATIONS

TECHNICAL REPORTS: Scientific and technical information considered important, complete, and a lasting contribution to existing knowledge.

TECHNICAL NOTES: Information less broad in scope but nevertheless of importance as a contribution to existing knowledge.

TECHNICAL MEMORANDUMS: Information receiving limited distribution because of preliminary data, security classification, or other reasons. Also includes conference proceedings with either limited or unlimited distribution.

CONTRACTOR REPORTS: Scientific and technical information generated under a NASA contract or grant and considered an important contribution to existing knowledge.

TECHNICAL TRANSLATIONS: Information published in a foreign language considered to merit NASA distribution in English.

SPECIAL PUBLICATIONS: Information derived from or of value to NASA activities. Publications include final reports of major projects, monographs, data compilations, handbooks, sourcebooks, and special bibliographies.

TECHNOLOGY UTILIZATION PUBLICATIONS: Information on technology used by NASA that may be of particular interest in commercial and other non-aerospace applications. Publications include Tech Briefs, Technology Utilization Reports and Technology Surveys.

Details on the availability of these publications may be obtained from:

SCIENTIFIC AND TECHNICAL INFORMATION OFFICE

NATIONAL AERONAUTICS AND SPACE ADMINISTRATION

Washington, D.C. 20546